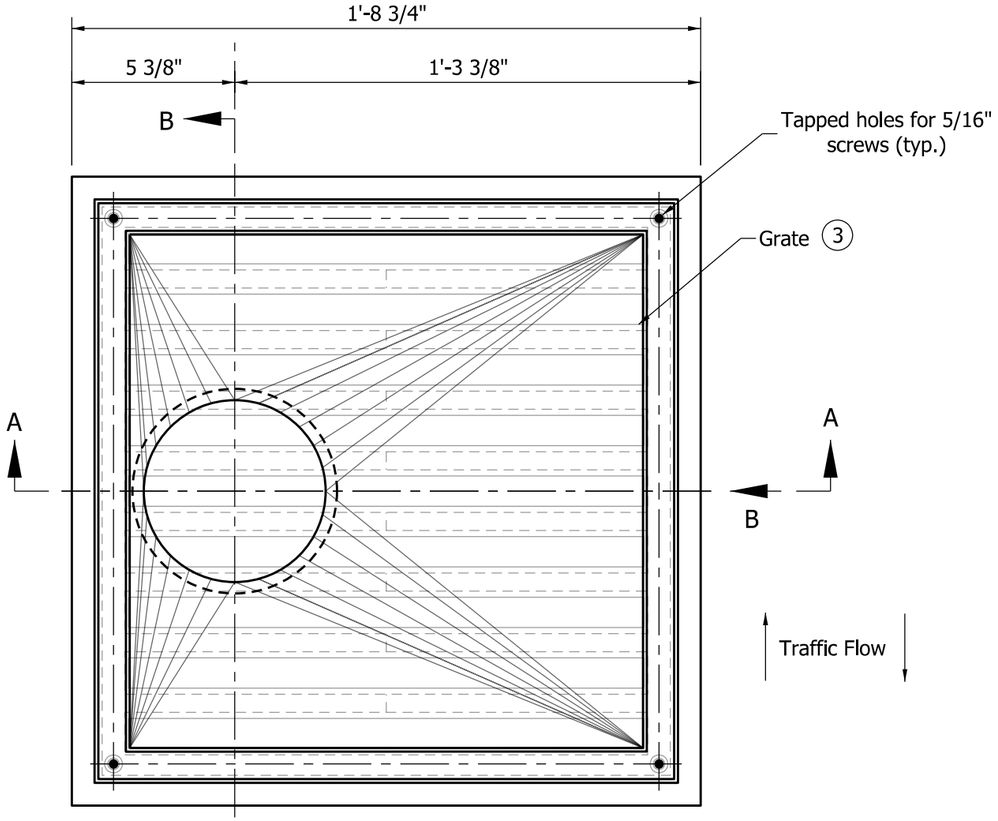

PLAN

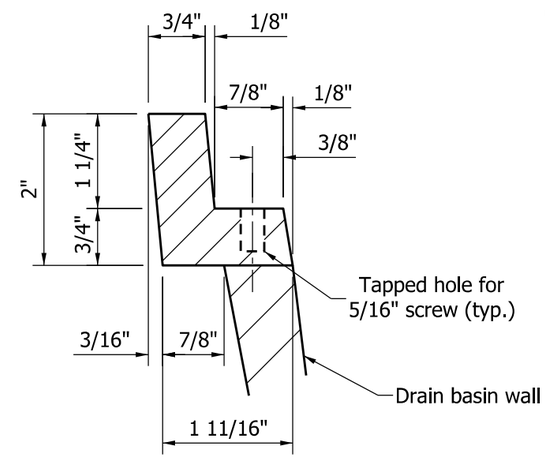

TYPICAL GRATE SHELF PROFILE

NOTES

1. See Standard Drawing E 715-BDCG-01 for deck drain casting extension pipe details.
2. See Standard Drawing E 704-BDCG-05 for adjusting frame details.

(3) See Standard Drawing E 704-BDCG-04 for grate details.

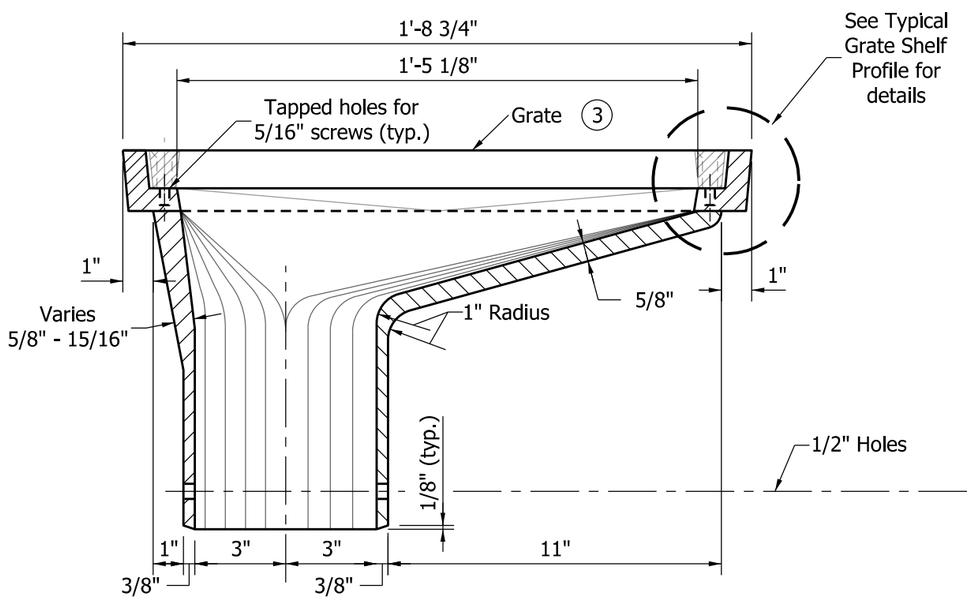

SECTION A-A

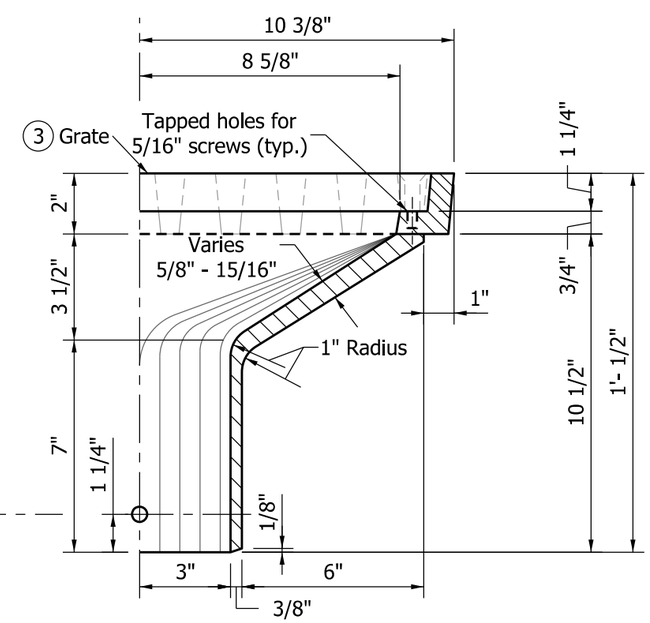

HALF SECTION B-B

INDIANA DEPARTMENT OF TRANSPORTATION

DECK DRAIN
TYPE SQ

SEPTEMBER 2012

STANDARD DRAWING NO. E 704-BDCG-03

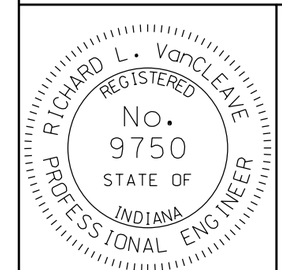

/s/ Richard L. Van Cleave 09/04/12
SUPERVISOR, ROADWAY STANDARDS DATE

/s/ Mark A. Miller 09/04/12
CHIEF ENGINEER DATE