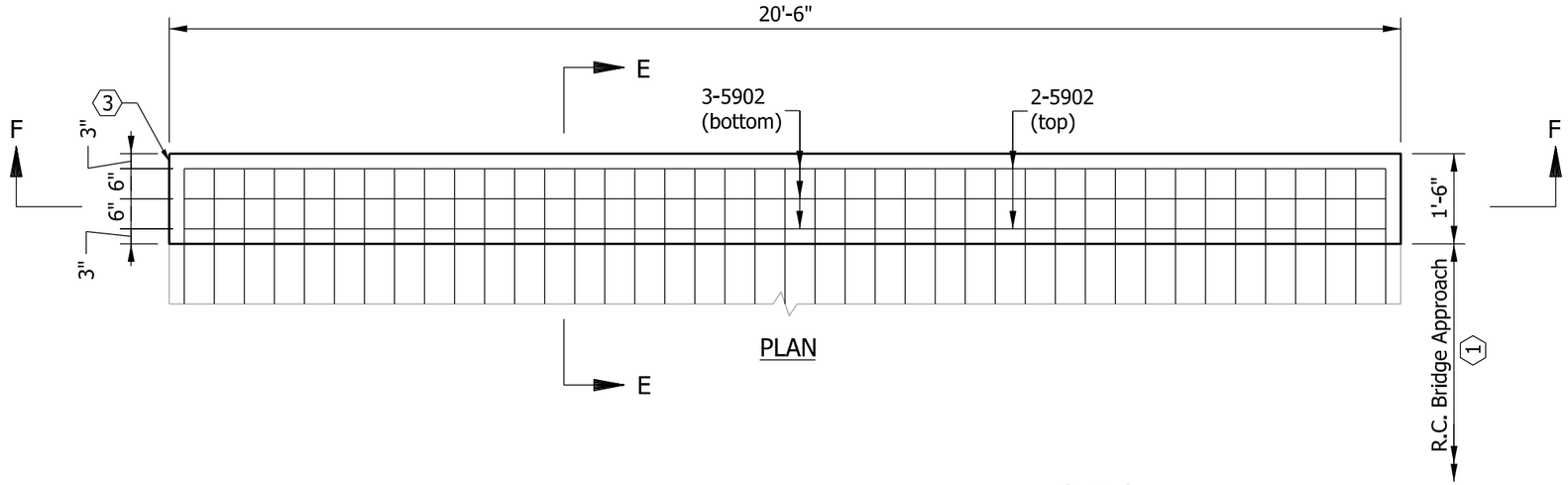

PLAN

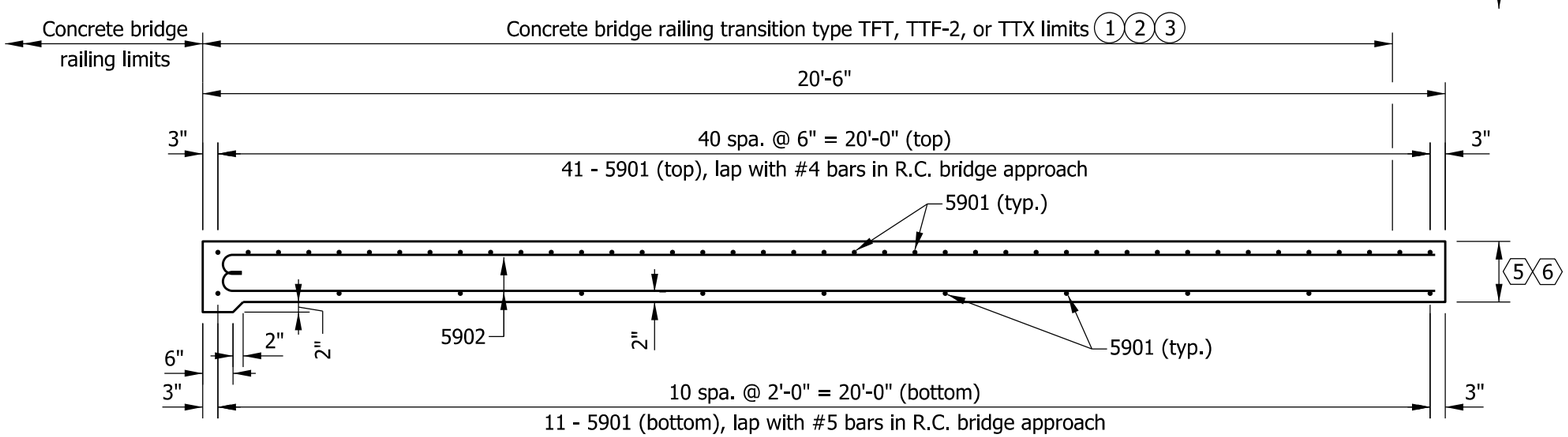

SECTION F-F

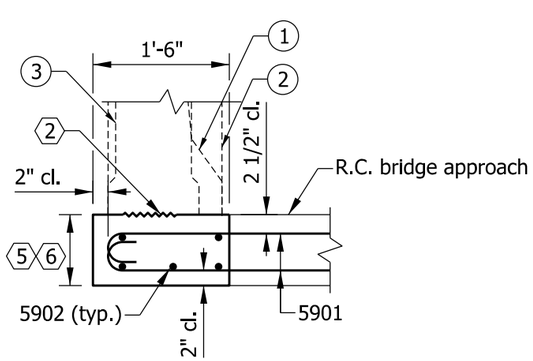

SECTION E-E

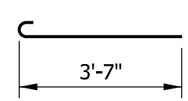

5901 x 4'-2"

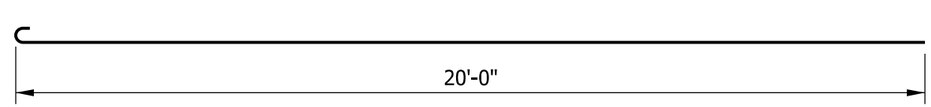

5902 x 20'-7"

NOTES

1. See Standard Drawing E 706-TTFT-01 through -03 for concrete bridge railing transition type TFT details.
2. See Standard Drawing E 706-TTTF-01 through -04 for concrete bridge railing transition type TTF-2 details.
3. See Standard Drawing E 706-TTTX-01 and -02 for concrete bridge railing transition type TTX details.
4. See Standard Drawing E 609-TBAE-04 for General Notes ⬡.

BILL OF MATERIALS			
Quantities are for one side's RCBA extension			
EPOXY-COATED REINFORCING STEEL			
MARK OR SIZE	NO. OF BARS	LENGTH	WEIGHT
5901	52	4'-2"	
5902	5	20'-7"	
Total Epoxy-Coated Reinforcing Steel			333 LBS
MISCELLANEOUS			
Concrete, Class C			3.4 SYS

INDIANA DEPARTMENT OF TRANSPORTATION

RCBA EXTENSION FOR
BRIDGE RAILING TRANSITION
TFT, TTF-2, OR TTX

SEPTEMBER 2012

STANDARD DRAWING NO. E 609-TBAE-02

RICHARD L. VanCLEAVE
REGISTERED
No. 9750
STATE OF
INDIANA
PROFESSIONAL ENGINEER

/s/ Richard L. Van Cleave 09/04/12
SUPERVISOR, ROADWAY STANDARDS DATE

/s/ Mark A. Miller 09/04/12
CHIEF ENGINEER DATE