Notes:

1. See Standard Drawing E 802-SNWW-02 for additional grating requirements.

(2) Grating shall run full length center to center of end support frames plus 9" each end.

(3) Grating width is nominal and may vary ± 1/2" based on available standard widths.

(4) Grating can be spliced on any of the horizontals within section as needed. See Detail 2 on Standard Drawing E 802-SBTS-15 for typical grating splice detail.

(5) See Standard Drawing E 802-SBTS-19, Detail 1 for typical grating-support detail.

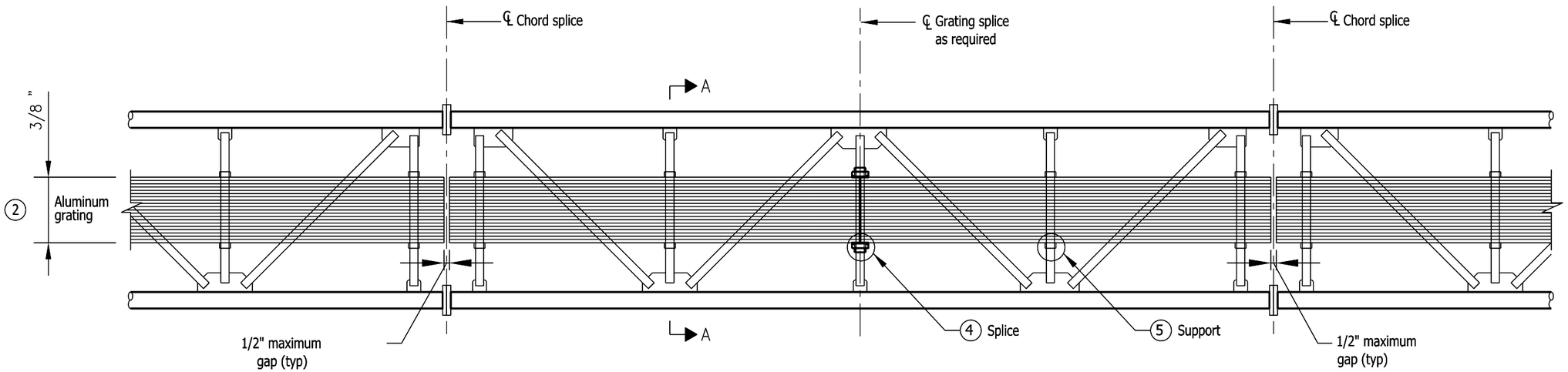

WALKWAY GRATING PLAN

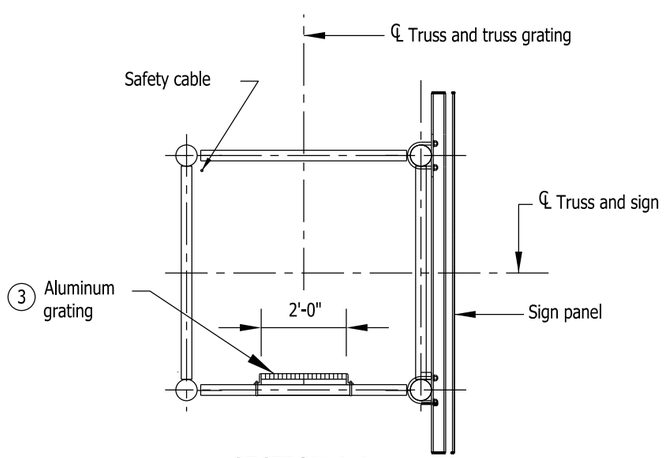

SECTION A-A

INDIANA DEPARTMENT OF TRANSPORTATION

SIGN BOX TRUSS STRUCTURE
INTERIOR-WALKWAY-GRATING PLAN

SEPTEMBER 2009

STANDARD DRAWING NO. E 802-SBTS-18

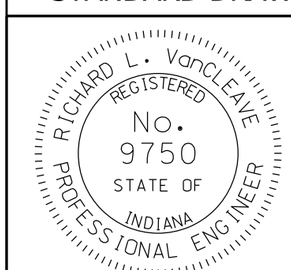

DESIGN STANDARDS ENGINEER

/s/ Richard L.VanCleave 09/01/09
DESIGN STANDARDS ENGINEER DATE

/s/ Mark A. Miller 09/01/09
CHIEF HIGHWAY ENGINEER DATE