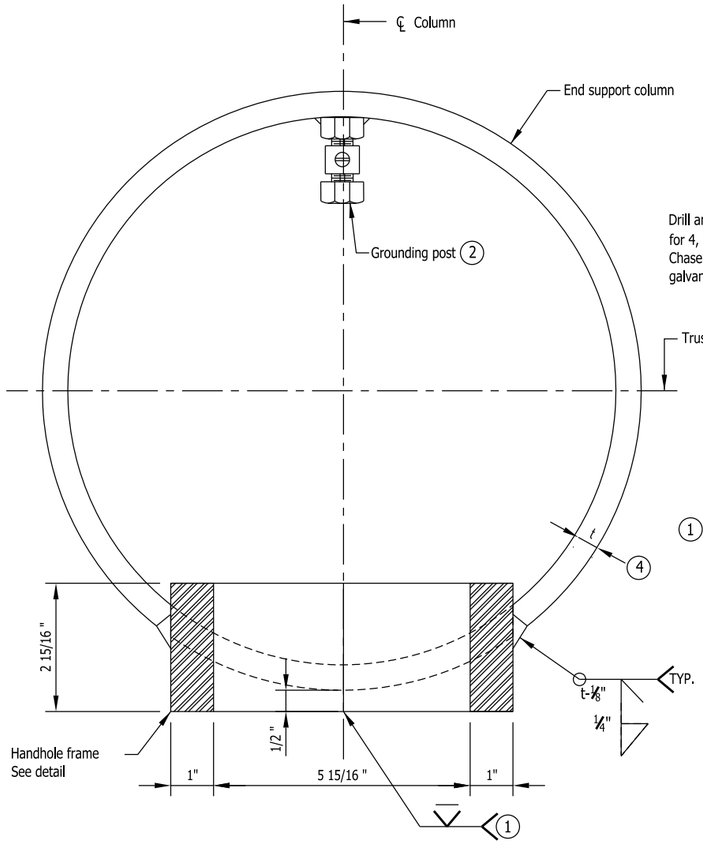

HANDHOLE
SECTION ACROSS COLUMN

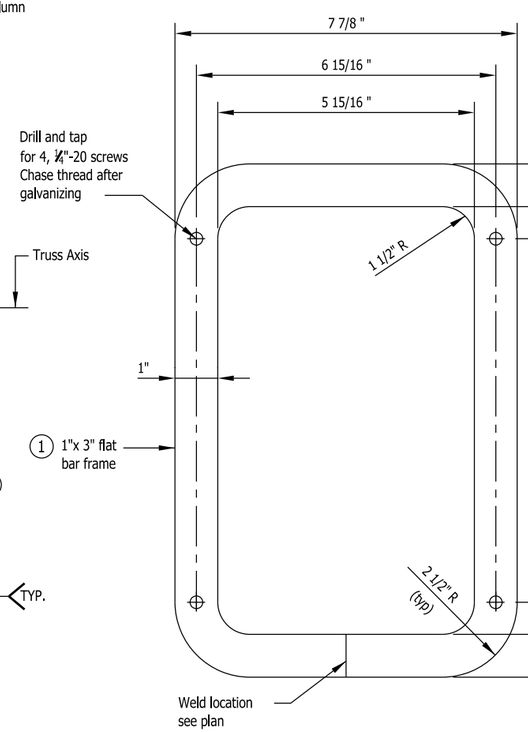

HANDHOLE FRAME DETAIL

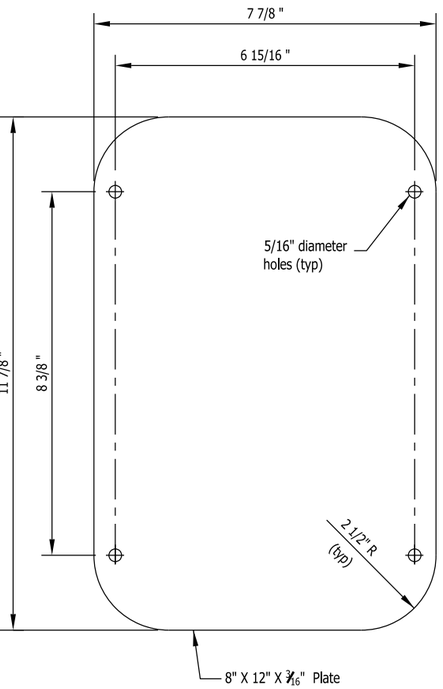

HANDHOLE COVER

NOTES:

1. In lieu of fabricated handhole frame as shown, frame may be cut from 3" plate (rolling direction vertical).
2. See Standard Drawing E 802-SNWR-03 for grounding post details. Grounding post to be placed on far side of support directly opposite center of handhole.
3. See Standard Drawing E 802-SBTS-12 for handhole locations.
4. See Standard Drawing E 802-SBTS-4 for thicknesses of end-support column.

INDIANA DEPARTMENT OF TRANSPORTATION

SIGN BOX TRUSS STRUCTURE
END-SUPPORT HANDHOLE DETAILS

SEPTEMBER 2009

STANDARD DRAWING NO. E 802-SBTS-12

RICHARD L. VanCLEAVE
REGISTERED
No. 9750
STATE OF
INDIANA
PROFESSIONAL ENGINEER

DESIGN STANDARDS ENGINEER

/s/ Richard L.VanCleave 09/01/09
DESIGN STANDARDS ENGINEER DATE

/s/ Mark A. Miller 09/01/09
CHIEF HIGHWAY ENGINEER DATE