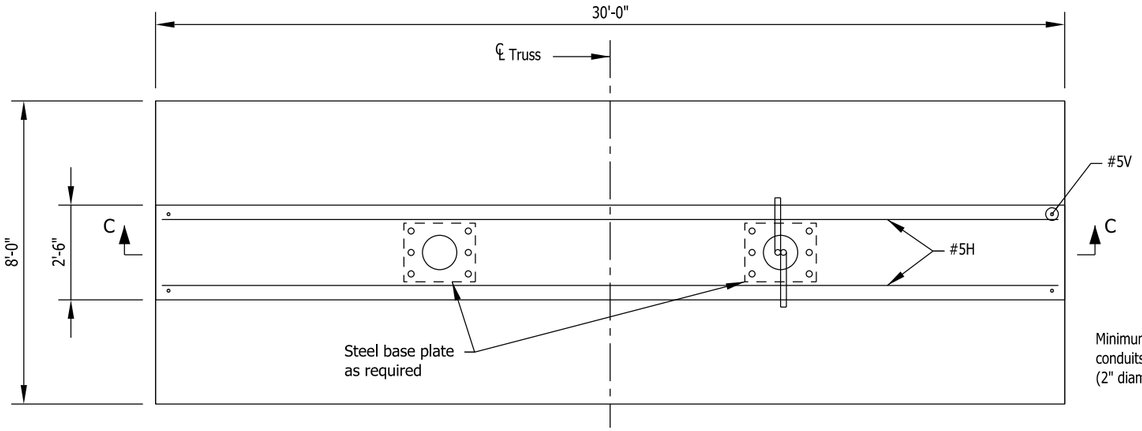

SECTIONB-B

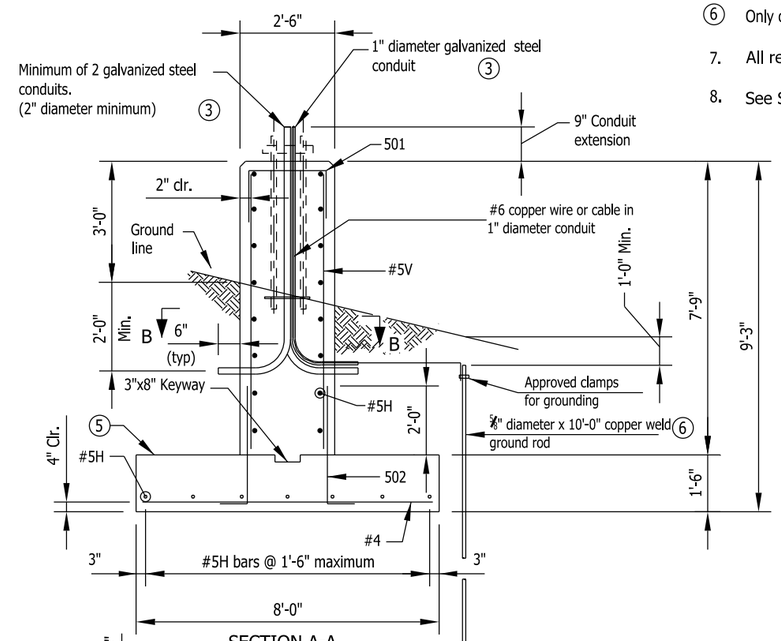

SECTION A-A

Notes:

1. See Standard Drawing E 602-CCMB-03 for concrete barrier details.
2. See Standard Drawing E 802-SBTS-11 for anchor bolts details.
3. Thread and cap both ends of steel conduit.
4. See Standard Drawing E 802-SBTS-04 for bill of materials.
5. The top of the footing shall be a minimum of 4'-0" or more below the pavement or ground surface.
6. Only one ground rod per structure is required.
7. All reinforcement to be epoxy coated.
8. See Standard Drawing E 802-SBTS-04 for reinforcing bar bending details.

Legend:

H = Horizontal bar

V = Vertical bar

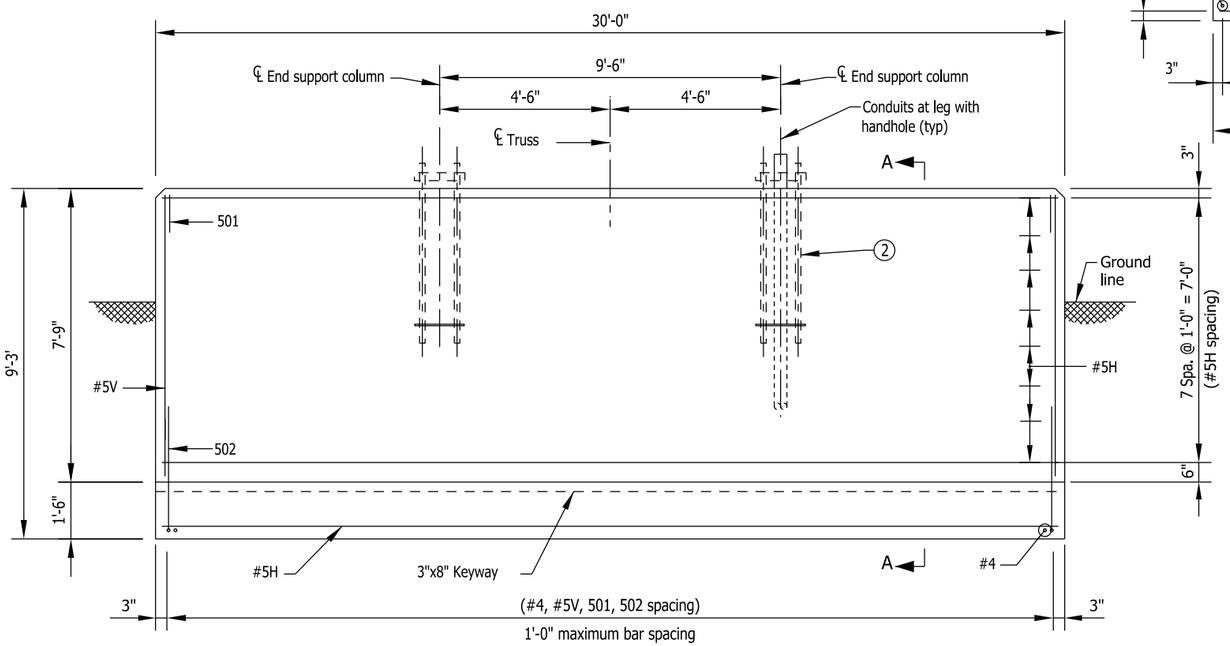

SECTION C-C

INDIANA DEPARTMENT OF TRANSPORTATION

SIGN BOX TRUSS STRUCTURE FOUNDATION WITHOUT BARRIER WALL

SEPTEMBER 2009

STANDARD DRAWING NO. E 802-SBTS-03

RICHARD L. VanCLEAVE
REGISTERED
No. 9750
STATE OF
INDIANA
PROFESSIONAL ENGINEER

DESIGN STANDARDS ENGINEER

/s/ Richard L.VanCleave 09/01/09
DESIGN STANDARDS ENGINEER DATE

/s/ Mark A. Miller 09/01/09
CHIEF HIGHWAY ENGINEER DATE