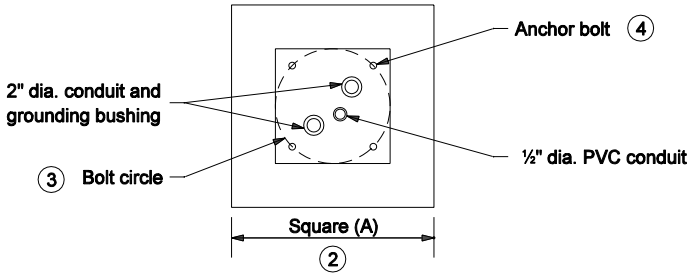

GENERAL NOTES

1. Top 6" of foundation may be squared.

(2) A round foundation may be supplied in lieu of square using the following equivalent (A) dimensions:
2'-6 Square = 3'-0 Round
3'-0 Square = 3'-6 Round

(3) See Base Plate Detail on Standard Drawing E 805-SGMA-05.

(4) See Standard Drawing E 805-SGMA-05 for Detail D.

SIGNAL CANTILEVER FOUNDATION DIMENSIONS		
ARM LENGTH (L), ft	SQUARE (A)	FDN. DEPTH (B)
12, 15, 20, 25	2'-6	7 ft
* 30, 35, 40 All Twin Arms	3'-0	8 ft
* Combination Pole (With Luminaire)	3'-0	8 ft

* Requires 4-#3 x 7'-9 as shown on foundation detail.

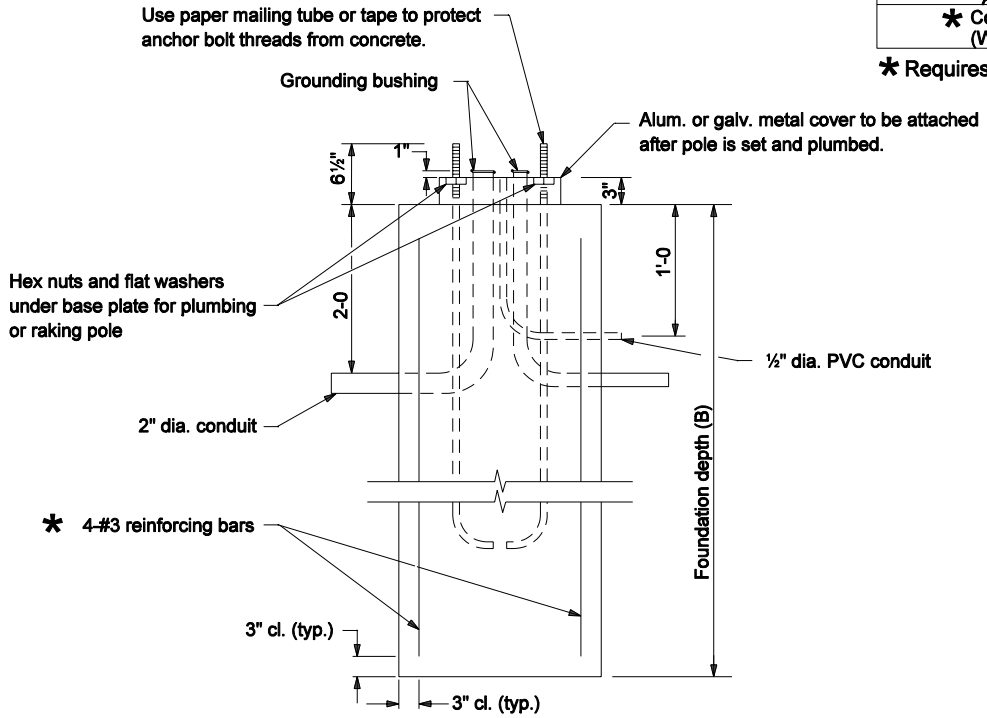

INDIANA DEPARTMENT OF TRANSPORTATION

SIGNAL CANTILEVER FOUNDATION DETAIL

SEPTEMBER 2006

STANDARD DRAWING NO. E 805-SGMA-03

RICHARD L. VanCLEAVE REGISTERED No. 9750 STATE OF INDIANA PROFESSIONAL ENGINEER

DESIGN STANDARDS ENGINEER

/s/ Richard L. VanCleave 9-01-06
DESIGN STANDARDS ENGINEER DATE

/s/ Richard K. Smutzer 9-01-06
CHIEF HIGHWAY ENGINEER DATE