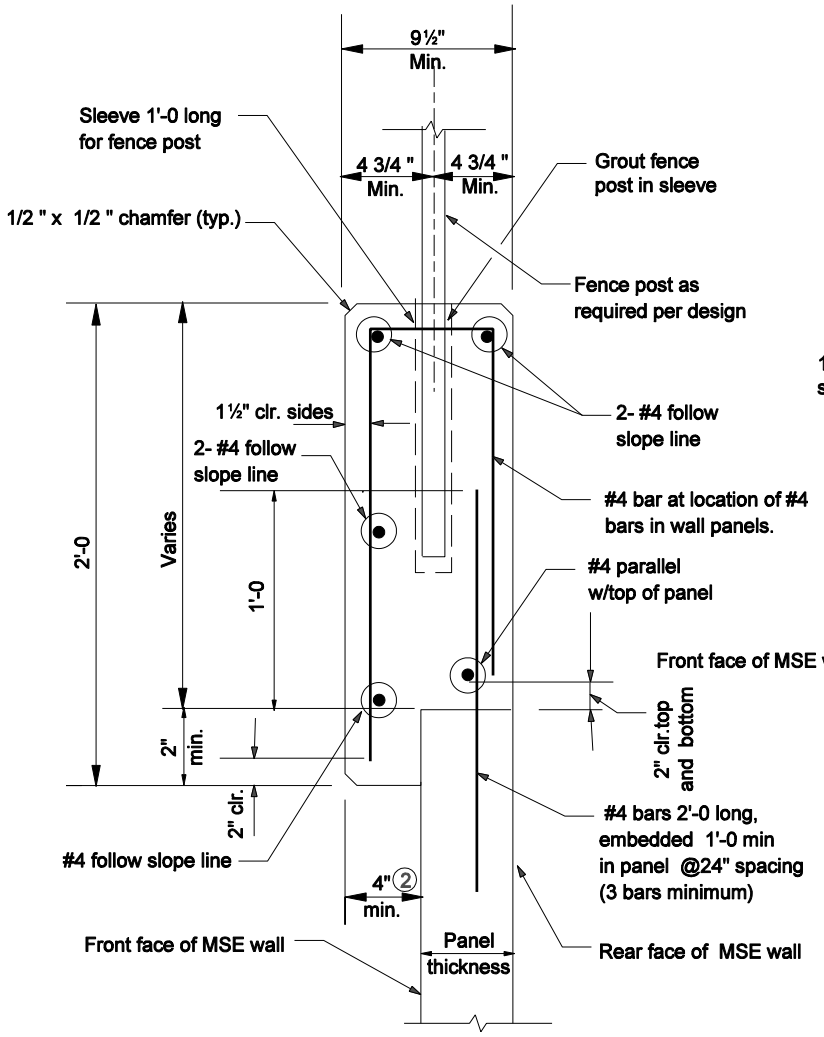

CAST IN PLACE CONCRETE COPING WITH PEDESTRIAN FENCE

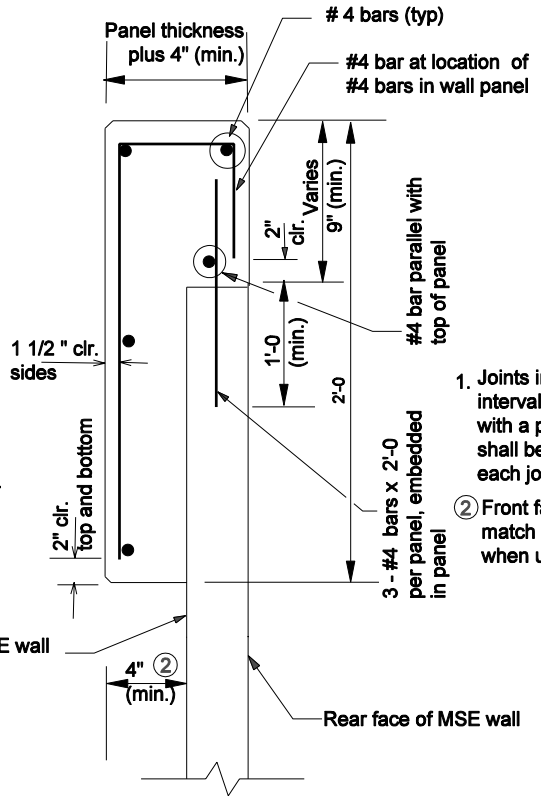

NOTES:

1. Joints in coping shall be at 2 panel intervals and coincide approximately with a panel joint. Reinforcing steel shall be stopped 2" short of near side of each joint.

② Front face of cast in place coping shall match the front face of precast coping when used in conjunction.

CAST IN PLACE CONCRETE COPING

INDIANA DEPARTMENT OF TRANSPORTATION

MSE WALL C - I - P COPING
AND PEDESTRIAN FENCE DETAILS

SEPTEMBER 2006

STANDARD DRAWING NO. E 731-BRRW-02

RICHARD L. VanCLEAVE REGISTERED No. 9750 STATE OF INDIANA PROFESSIONAL ENGINEER

DESIGN STANDARDS ENGINEER

/s/ Richard L. VanCleave 9-01-06
DESIGN STANDARDS ENGINEER DATE

/s/ Richard K. Smutzer 9-01-06
CHIEF HIGHWAY ENGINEER DATE