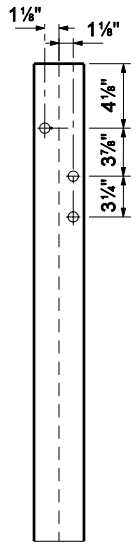

FRONT VIEW

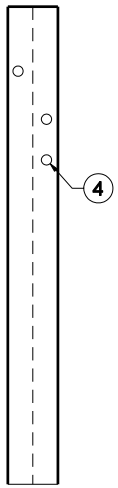

BACK VIEW

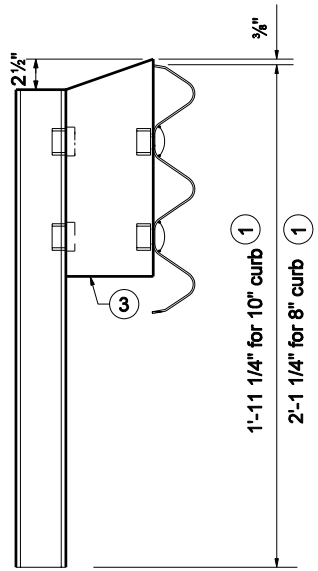

SIDE VIEW

W 6 x 25 POST DETAILS FOR CURB MOUNTED POSTS

NOTE:

1. Adjust the post length for thrie beam height above the deck.
2. Locations of bolt holes on base plate shall match locations of existing anchor bolts.
3. See Standrad Drawing E 706-TBRF-02 for blockout details.
4. All holes drilled or punched to ¾" dia.

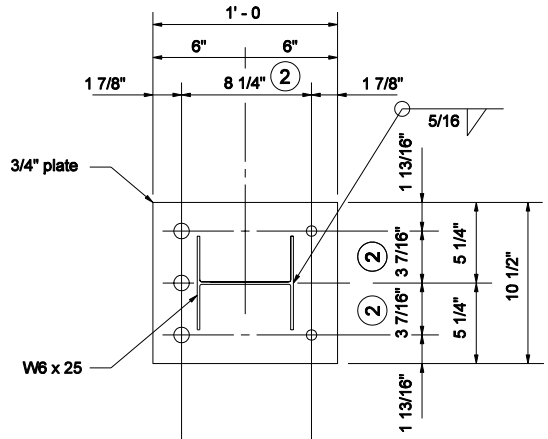

℄ of anchor bolts 3/4" ø min. on traffic side bolt holes = bolt dia. +1/4" (2)

℄ of anchor bolts 5/8" ø min. bolt holes = bolt dia. +1/8" (2)

BASE PLATE DETAIL

INDIANA DEPARTMENT OF TRANSPORTATION

RETROFIT THRIE BEAM BRIDGE RAILING TR COMPONENTS

SEPTEMBER 2006

STANDARD DRAWING NO. E 706-TBRC-03

RICHARD L. VanCLEAVE REGISTERED No. 9750 STATE OF INDIANA PROFESSIONAL ENGINEER

DESIGN STANDARDS ENGINEER

/s/ Richard L. VanCleave 9-01-06
DESIGN STANDARDS ENGINEER DATE

/s/ Richard K. Smutzer 9-01-06
CHIEF HIGHWAY ENGINEER DATE