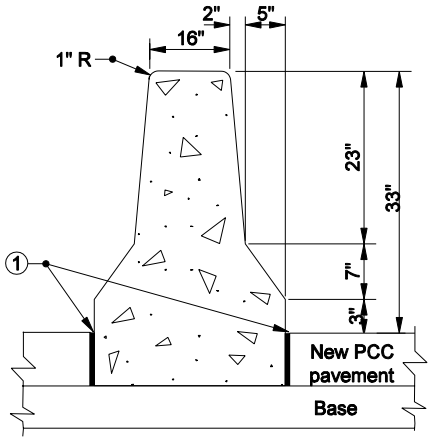

NEW PCC PAVEMENT

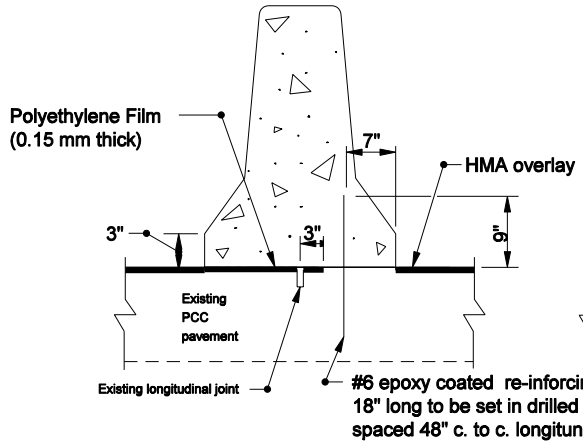

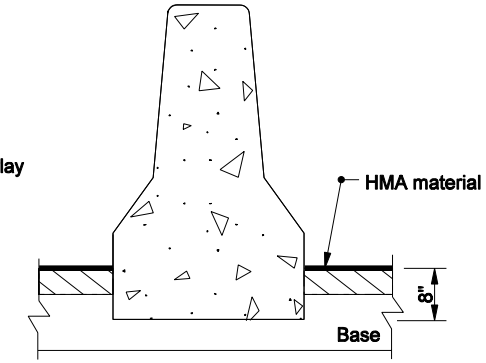

NEW HMA PAVEMENT

NEW HMA OVERLAY OVER EXISTING PCC PAVEMENT

33" HEIGHT CONCRETE BARRIER WALL

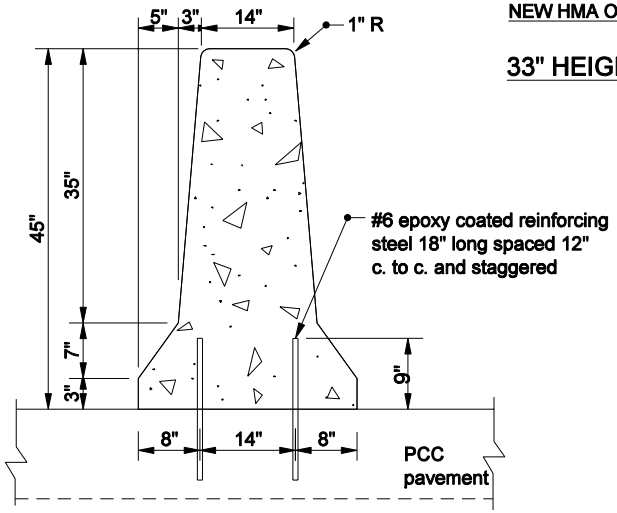

CONCRETE BARRIER WITH PCC PAVEMENT

45" HEIGHT CONCRETE BARRIER WALL

NOTES:

1. $\frac{1}{2}$" Preformed Joint Filler.

INDIANA DEPARTMENT OF TRANSPORTATION

CONCRETE BARRIER DETAILS

SEPTEMBER 2006

STANDARD DRAWING NO. E 602-CCMB-04

RICHARD L. VanCLEAVE REGISTERED No. 9750 STATE OF INDIANA PROFESSIONAL ENGINEER

DESIGN STANDARDS ENGINEER

/s/ Richard L. VanCleave 9-01-06
DESIGN STANDARDS ENGINEER DATE

/s/ Richard K. Smutzer 9-01-06
CHIEF HIGHWAY ENGINEER DATE