NOTES:

1. See Standard Drawing 703-BRST-01 for standard 180* bar bending detail.
2. All reinforcing bars designated "E" shall be epoxy coated.
3. Concrete in bridge railing trans- for attachment of guardrail Type TGB.
4. See Standard Drawing 706-CBRT-02 ition to be class C.
5. See Standard Drawing 706-TASE-01, 02 & 05 for Bridge Railing Transition TBC Slab Extension.

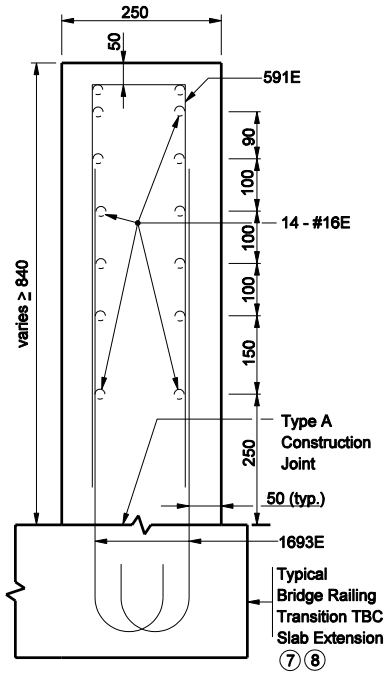

Section A - A

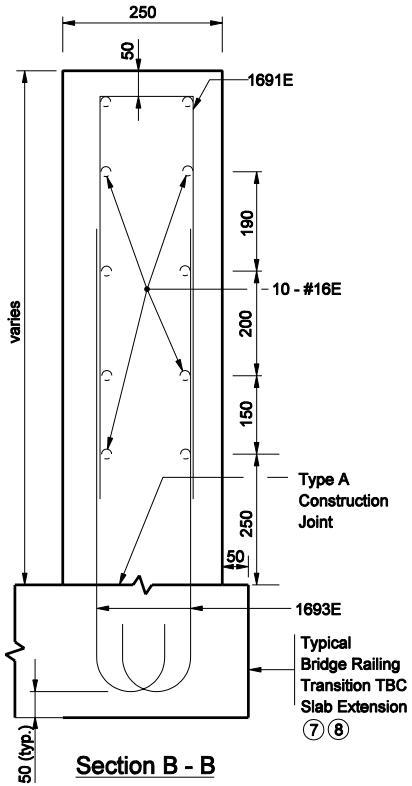

Section B - B

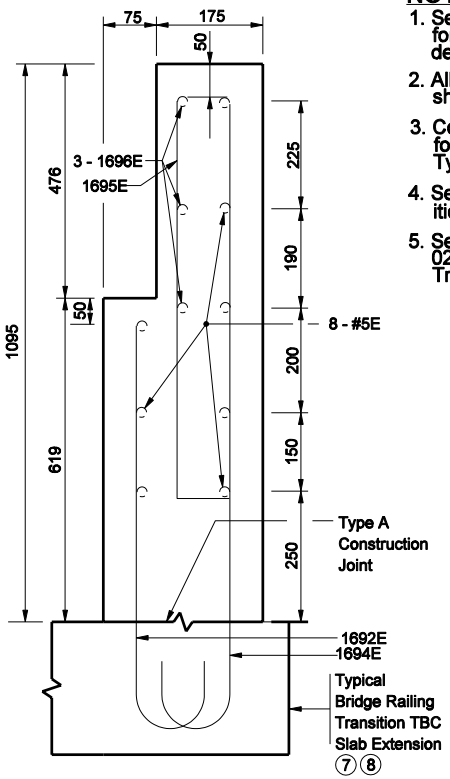

Section C - C

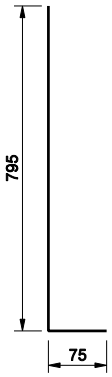

1695E x 870

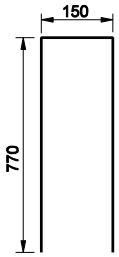

1691E x 1690

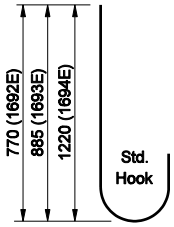

1692E x 1010
1693E x 1152
1694E x 1460

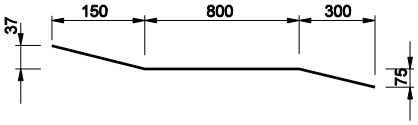

1696E x 1315

All dimensions are in mm unless otherwise specfied

INDIANA DEPARTMENT OF TRANSPORTATION

CONCRETE BRIDGE RAILING TRANSITION, TPF-1

SEPTEMBER 2006

STANDARD DRAWING NO. 706-TTBP-02

RICHARD L. VanCLEAVE REGISTERED No. 9750 STATE OF INDIANA PROFESSIONAL ENGINEER

DESIGN STANDARDS ENGINEER

/s/ Richard L. VanCleave 9-01-06
DESIGN STANDARDS ENGINEER DATE

/s/ Richard K. Smutzer 9-01-06
CHIEF HIGHWAY ENGINEER DATE