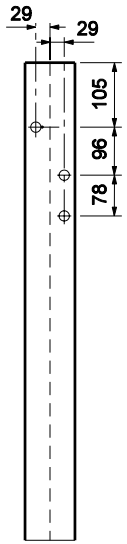

FRONT VIEW

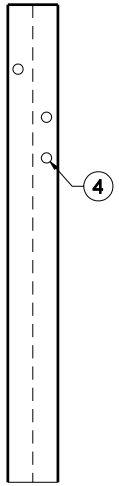

BACK VIEW

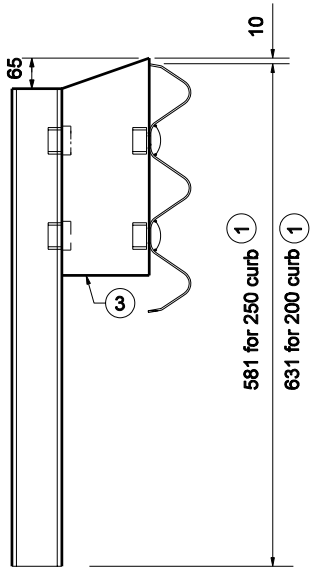

SIDE VIEW

W 150 x 37 POST DETAILS FOR CURB MOUNTED POSTS

NOTE:

1. Adjust the post length for thrie beam height above the deck.
2. Locations of bolt holes on base plate shall match locations of existing anchor bolts.
3. See Standrad Drawing 706-TBRF-02 for blockout details.
4. All holes drilled or punched to 19 dia.

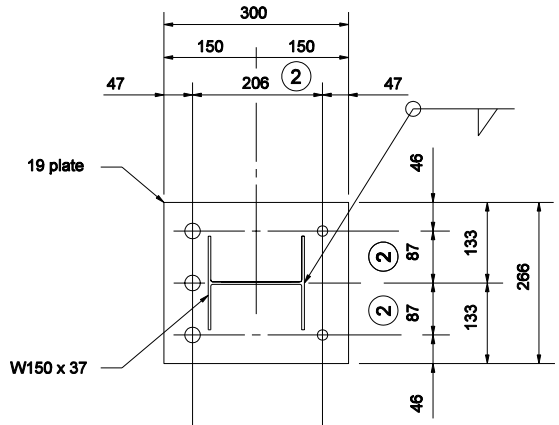

℄ of anchor bolts 19 ø min. on traffic side bolt holes = bolt dia. +6 (2)

℄ of anchor bolts 19 ø min. bolt holes = bolt dia. +3 (2)

BASE PLATE DETAIL

All dimension are in mm unless otherwise specfied

INDIANA DEPARTMENT OF TRANSPORTATION

RETROFIT THRIE BEAM BRIDGE RAILING TR COMPONENTS

SEPTEMBER 2006

STANDARD DRAWING NO. 706-TBRC-03

RICHARD L. VanCLEAVE REGISTERED No. 9750 STATE OF INDIANA PROFESSIONAL ENGINEER

DESIGN STANDARDS ENGINEER

/s/ Richard L. VanCleave 9-01-06
DESIGN STANDARDS ENGINEER DATE

/s/ Richard K. Smutzer 9-01-06
CHIEF HIGHWAY ENGINEER DATE