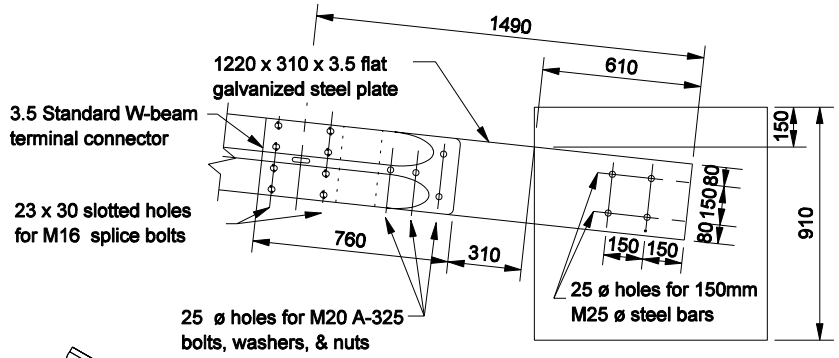

CONCRETE ANCHOR DETAIL

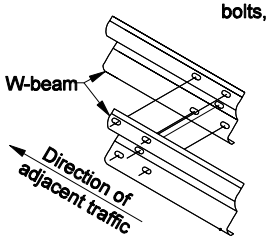

LAP DETAIL

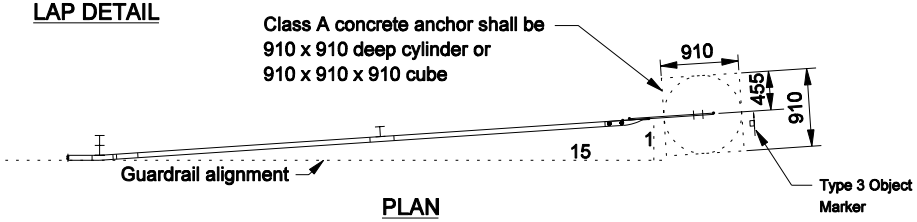

PLAN

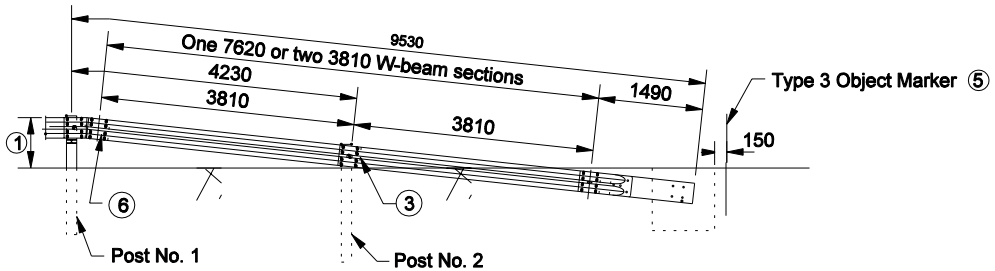

Post No. 1 & No. 2 length = 1830

ELEVATION

GENERAL NOTES

① The top of rail height at this post shall match the height of the adjacent guardrail.

2. Installation of guardrail end treatment type I at the end of a run of rub-rail type guardrail shall require the relocation of the rub-rail as shown.

③ See Standard Drawing 601-GRET-04 for Post No.2 Connection Detail.

④ If rub-rail is not spliced at post, the channel shall be cut and repositioned behind the post flange.

⑤ See Standard Drawing 808-MKNB-03 for Object Marker Type 3 Details.

⑥ See Standard Drawing 601-GRET-04 for Splice Plate Assembly Detail.

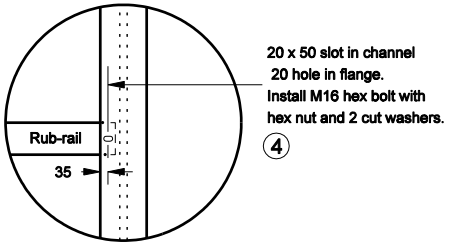

RUB-RAIL RELOCATION DETAIL

All dimensions are in mm unless otherwise specfied

INDIANA DEPARTMENT OF TRANSPORTATION

GUARDRAIL
END TREATMENT TYPE I

SEPTEMBER 2006

STANDARD DRAWING NO. 601-GRET-05

RICHARD L. VanCLEAVE REGISTERED No. 9750 STATE OF INDIANA PROFESSIONAL ENGINEER

DESIGN STANDARDS ENGINEER

/s/ Richard L. VanCleave 9-01-06
DESIGN STANDARDS ENGINEER DATE

/s/ Richard K. Smutzer 9-01-06
CHIEF HIGHWAY ENGINEER DATE