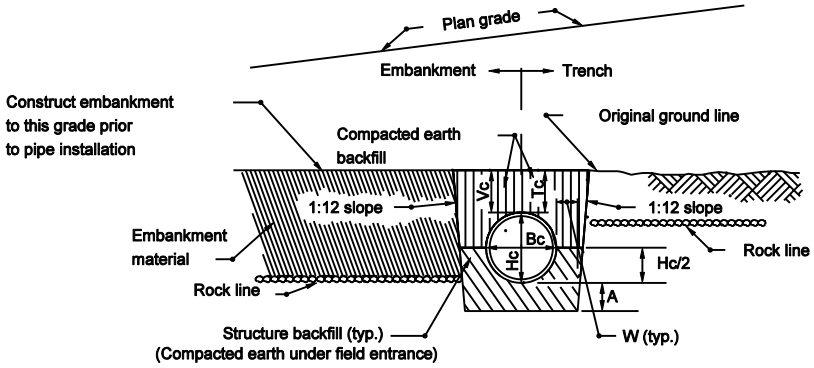

SECTION D-D
EMBANKMENT/TRENCH INSTALLATION
ROCK FOUNDATION

NOTES

1. Refer to Standard Drawing 715-BKFL-09 for general notes.

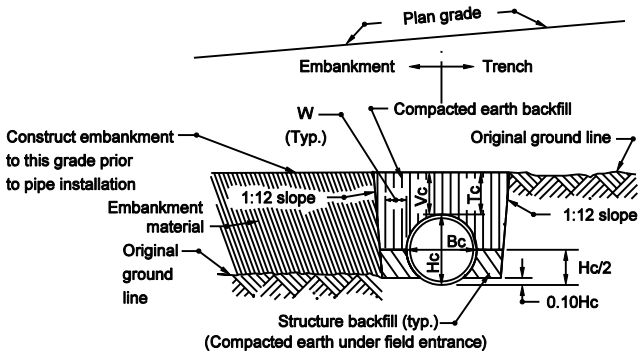

SECTION D-D
EMBANKMENT/TRENCH INSTALLATION

LEGEND

Hc	=	Overall diameter or rise
Bc	=	Overall diameter or span
A	=	200 min. for fill height up to 5.0 m
	=	300 min. for fill height of 5.0 m or more
Vc	=	300 for Bc ≤ 450
	=	500 for Bc > 450
Tc	=	Trench cover depth
W	=	0.3 Bc or 230, whichever is greater
⑦ E	=	Encasement

METHOD 2 BACKFILL

Structures under commercial and private drive approaches.

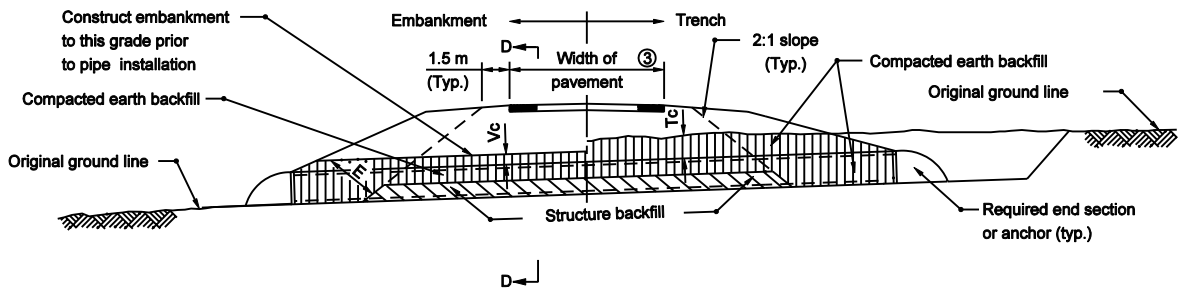

ELEVATION

All Dimension are in mm unless otherwise specfied

INDIANA DEPARTMENT OF TRANSPORTATION

PIPE STRUCTURE BACKFILL
DRIVEWAY INSTALLATIONS

MARCH 2003

STANDARD DRAWING NO. 715-BKFL-07

ANTHONY L. UREMOVICH REGISTERED No. 18095 STATE OF INDIANA PROFESSIONAL ENGINEER

DESIGN STANDARDS ENGINEER

/s/ Anthony L.Uremovich 3-03-03
DESIGN STANDARDS ENGINEER DATE

/s/ Richard K.Smutzer 3-03-03
CHIEF HIGHWAY ENGINEER DATE