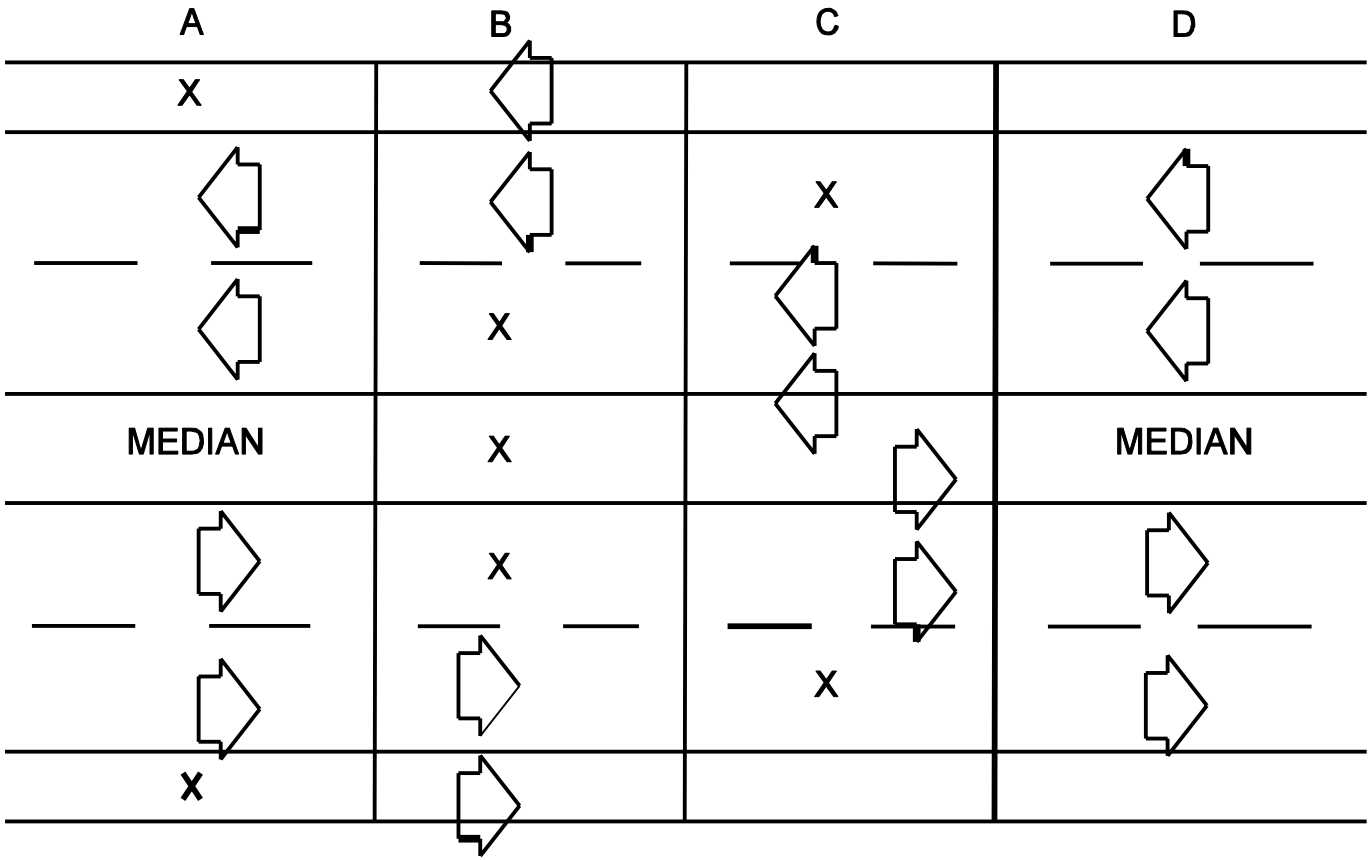

A = Construction of Shoulder
B = Construction of Inner Lanes
C = Construction of Outer Lanes
D = Following Construction
X = Construction Activity
⇦ = Trafic Flow

PARALLEL/ ADJACENT RECONSTRUCTION

Figure 81-3B