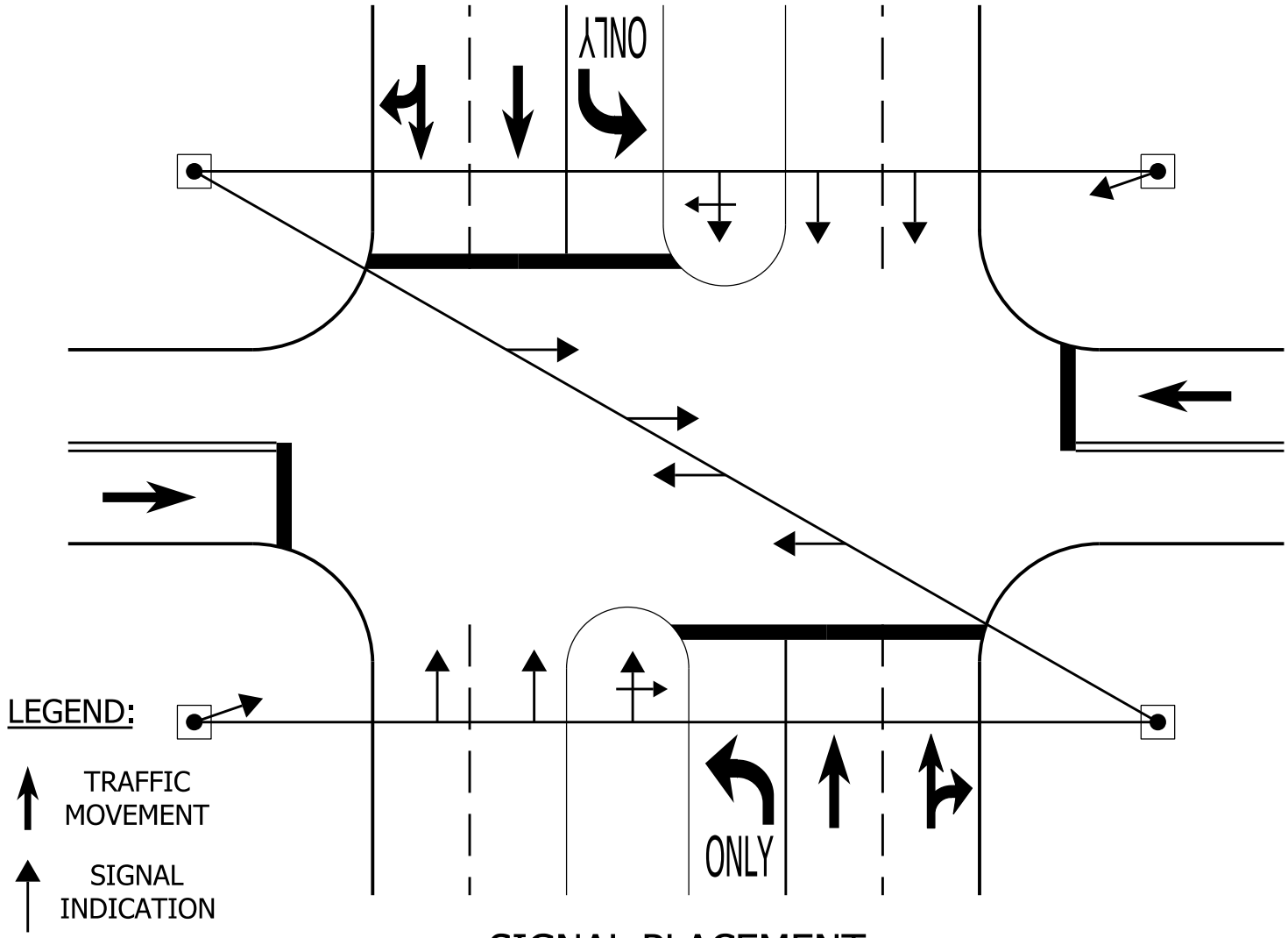

SIGNAL PLACEMENT
MULTIPLE-LANES APPROACH, Z-SPAN WITH SUPPLEMENTAL FAR-SIDE HEADS

Figure 77-5I