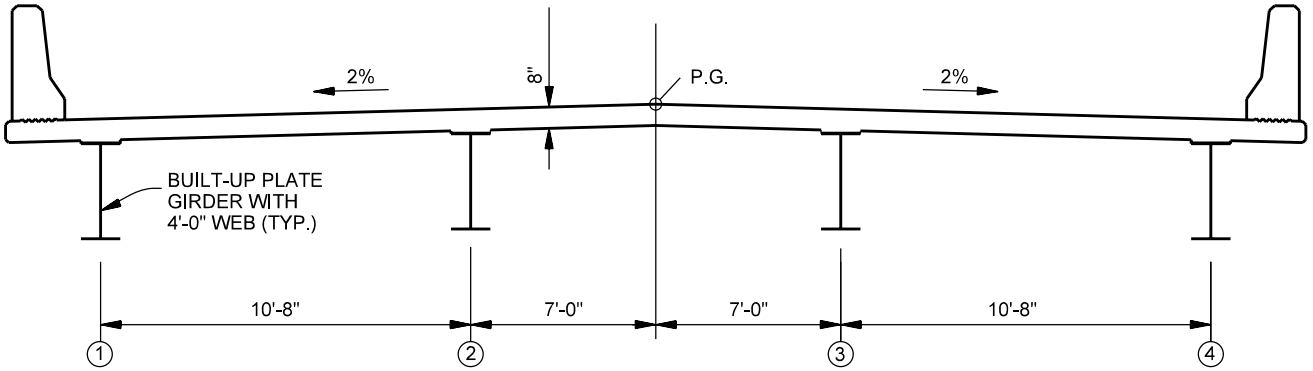

WEB DEPTH = 4'-0"

MAXIMUM FLANGE WIDTH = 2'-4"

MAXIMUM TOP FLANGE THICKNESS = 1.5"

MAXIMUM SPLICE PLATE THICKNESS, TOP FLANGE = 1"

BOTTOM FLANGE THICKNESS AT SUPPORT = 1.5"

MINIMUM SHIM THICKNESS BETWEEN TOP SHOE AND BOTTOM OF BEAM = 1/2"
(SHIM SHOULD BE SUPPLIED AS FOUR 1/8" THICK PLATES)

BEARING THICKNESS, TOP OF TOP SHOE TO
BOTTOM OF BOTTOM SHOE = 4 3/4"

DETERMINE CONTROL DIMENSION "Y": (SEE SECTION 61-4.02(02))
SINCE THE SPLICE PLATE IS LESS THAN 1 1/8" IN THICKNESS,
THE 3/4" FILLET DISTANCE WILL CONTROL.

"Y" = 8" + 0.75" + (0.02)(16")(0.5) + 1.5" = 10.41"

SINCE DIFFERENCE IN TOP OF DECK ELEVATIONS AT ℄ OF ADJACENT BEAMS IS GREATER THAN 1 1/2" BETWEEN BEAMS NO.1 AND NO.2 AND BETWEEN BEAMS NO.3 AND NO.4, CONCRETE STEPS ARE REQUIRED BETWEEN THESE BEAMS. ADDITIONAL SHIMS REQUIRED BETWEEN BOTTOM OF BEAM AND TOP SHOE AT BEAM NO.3.

SEE FIGURE 67-5G FOR FINAL BRIDGE SEAT ELEVATIONS.

TYPICAL BRIDGE SECTION
(Built-Up Plate Girder Example)

Figure 67-5D