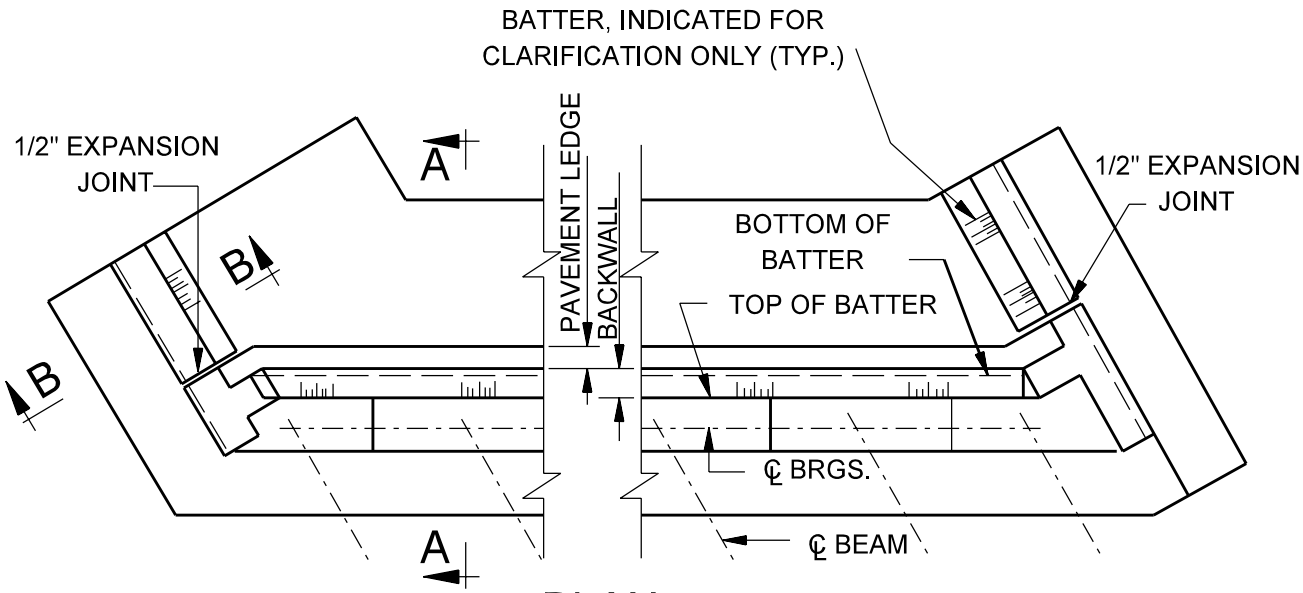

PLAN

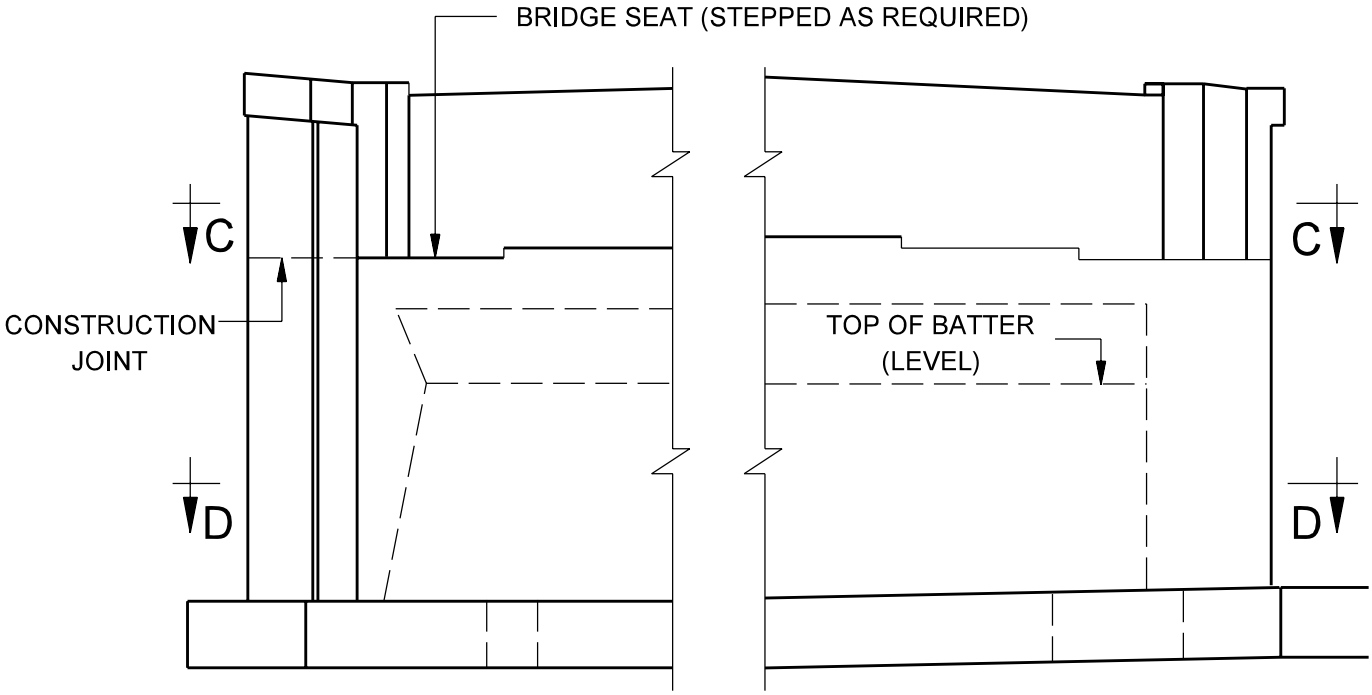

ELEVATION

TYPICAL ABUTMENT DETAILS

Figure 67-2D
(Page 1 of 2)

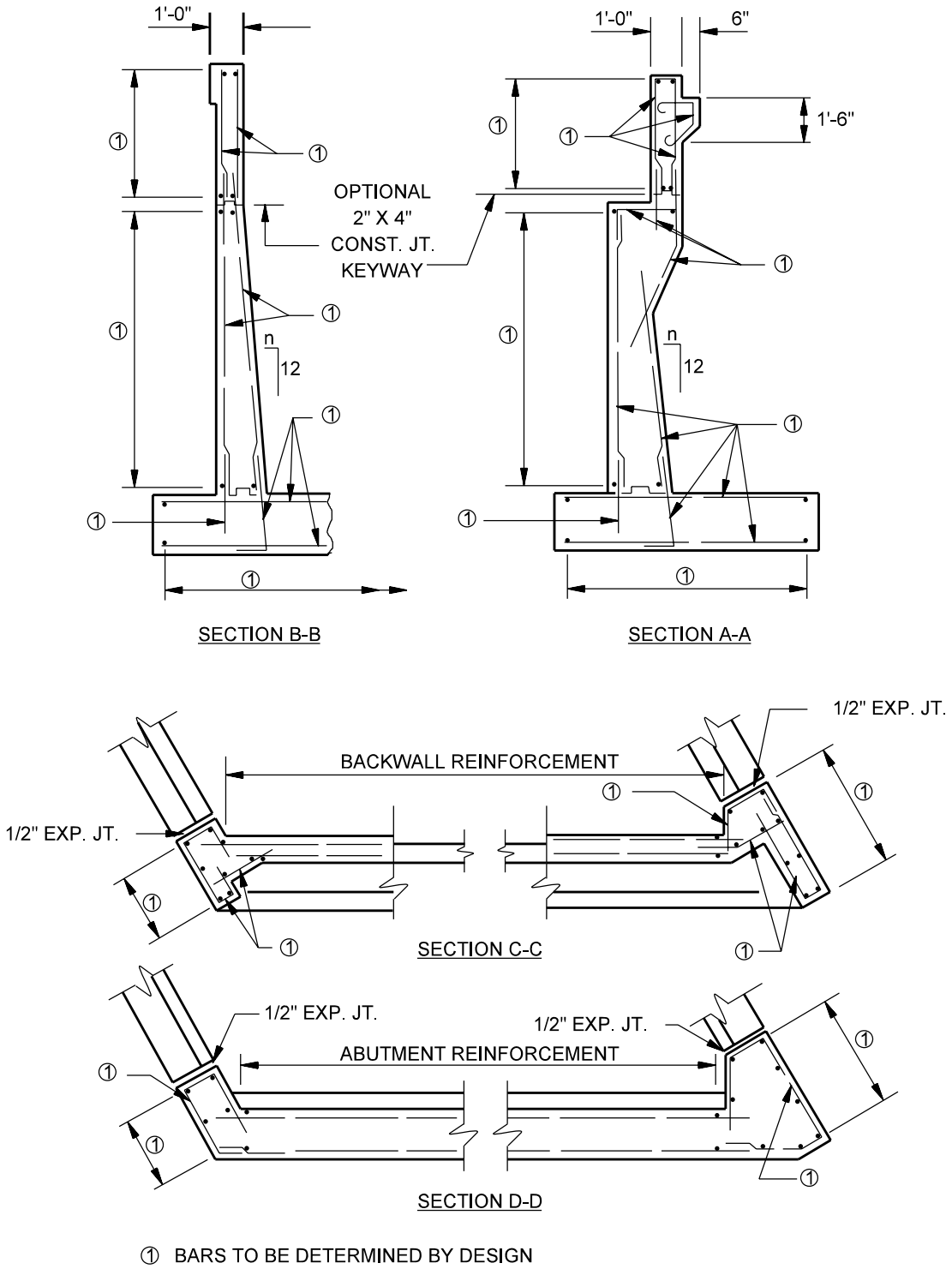

① BARS TO BE DETERMINED BY DESIGN

TYPICAL ABUTMENT DETAILS

Figure 67-2D
(Page 2 of 2)