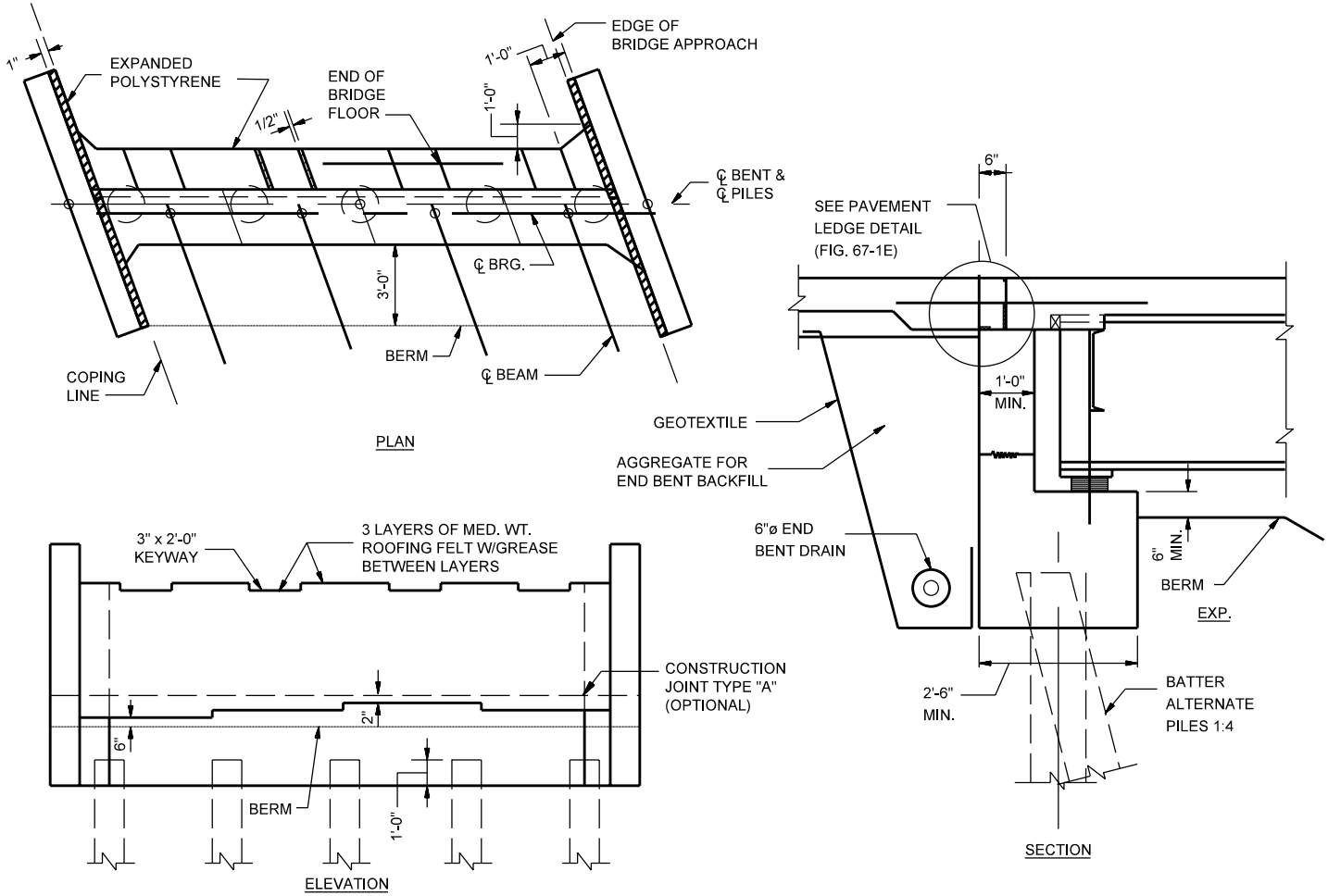

NON-INTEGRAL END BENT
(Deck without Expansion Joint)

Figure 67-1G