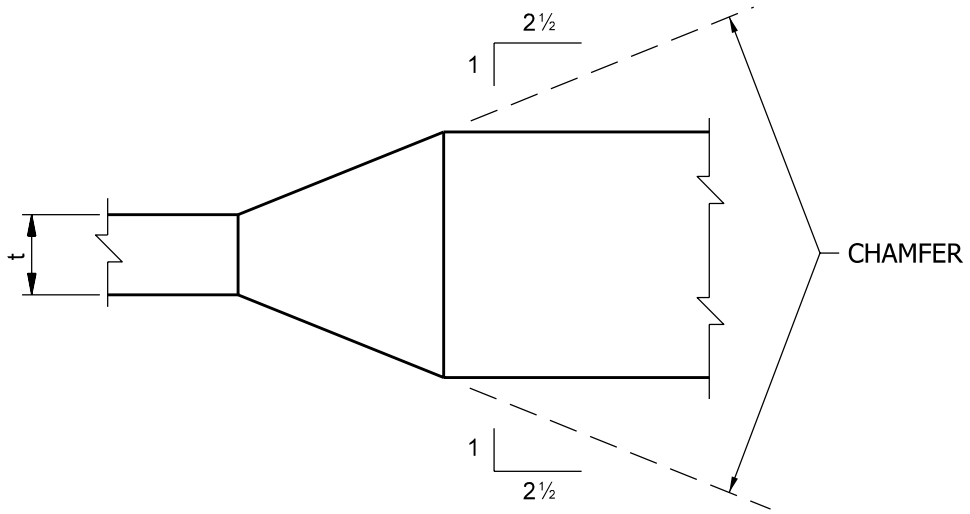

WEB SPLICE DETAILS

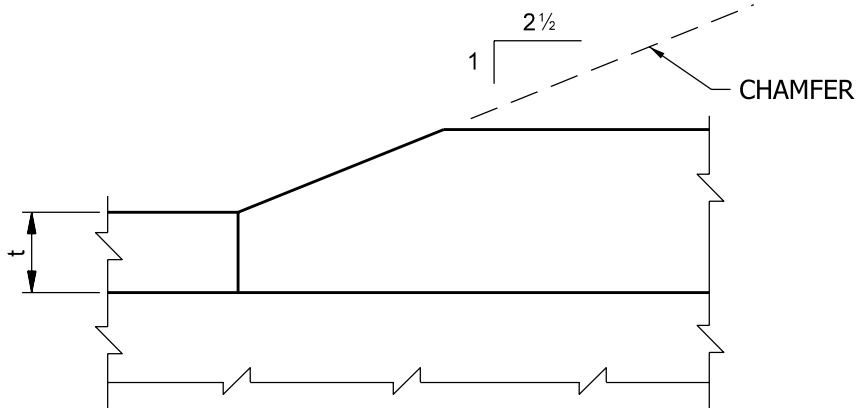

FLANGE SPLICE DETAILS

TYPICAL SUBMERGED ARC WELD DETAILS

Figure 64-8E