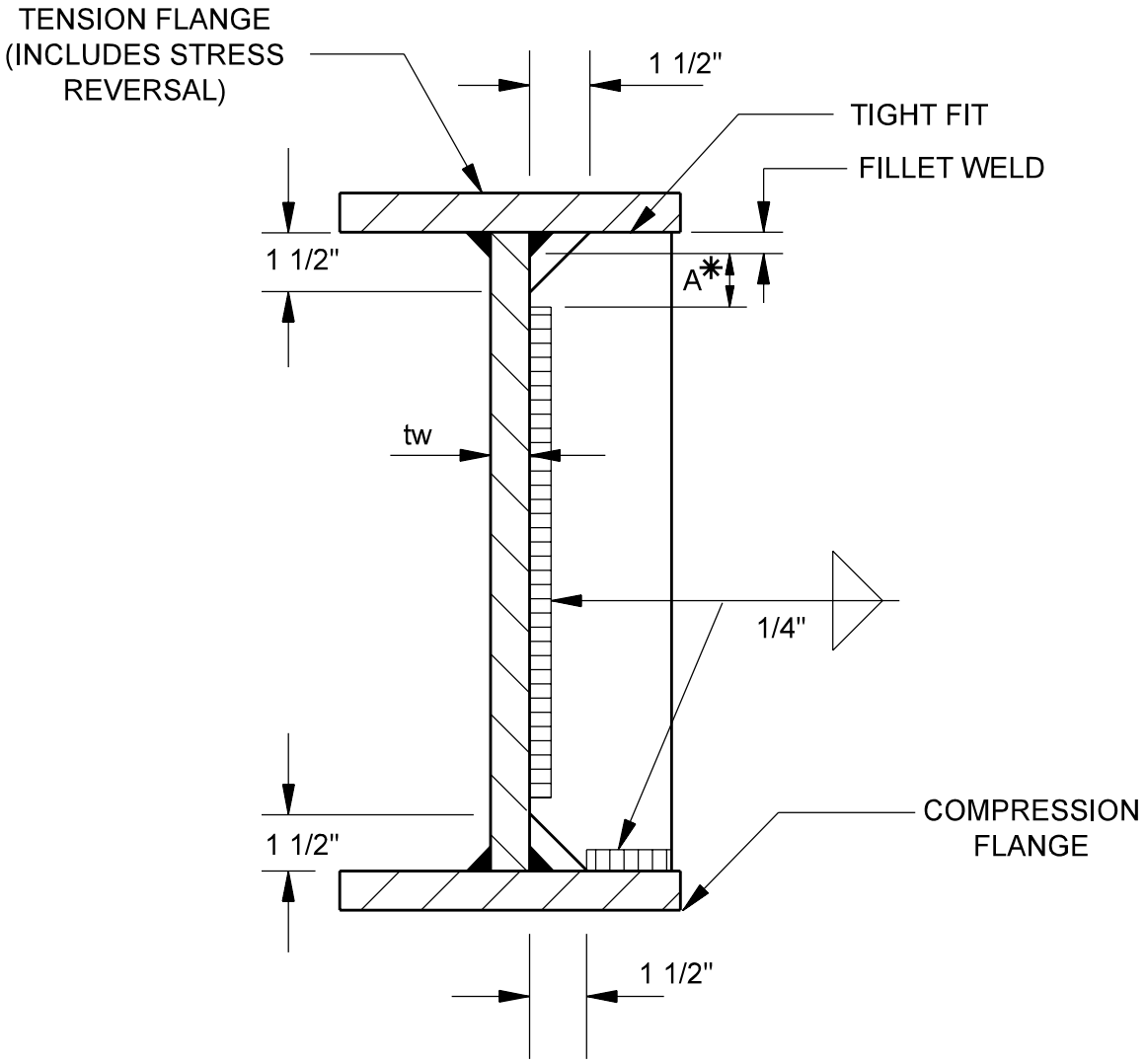

* NOTE: FOR ROLLED BEAMS, THE "A" DIMENSION IS TAKEN FROM THE BOTTOM OF FLANGE.
$4t_w \angle A \angle 6t_w$

TRANSVERSE INTERMEDIATE STIFFENER DETAILS

Figure 64-6B