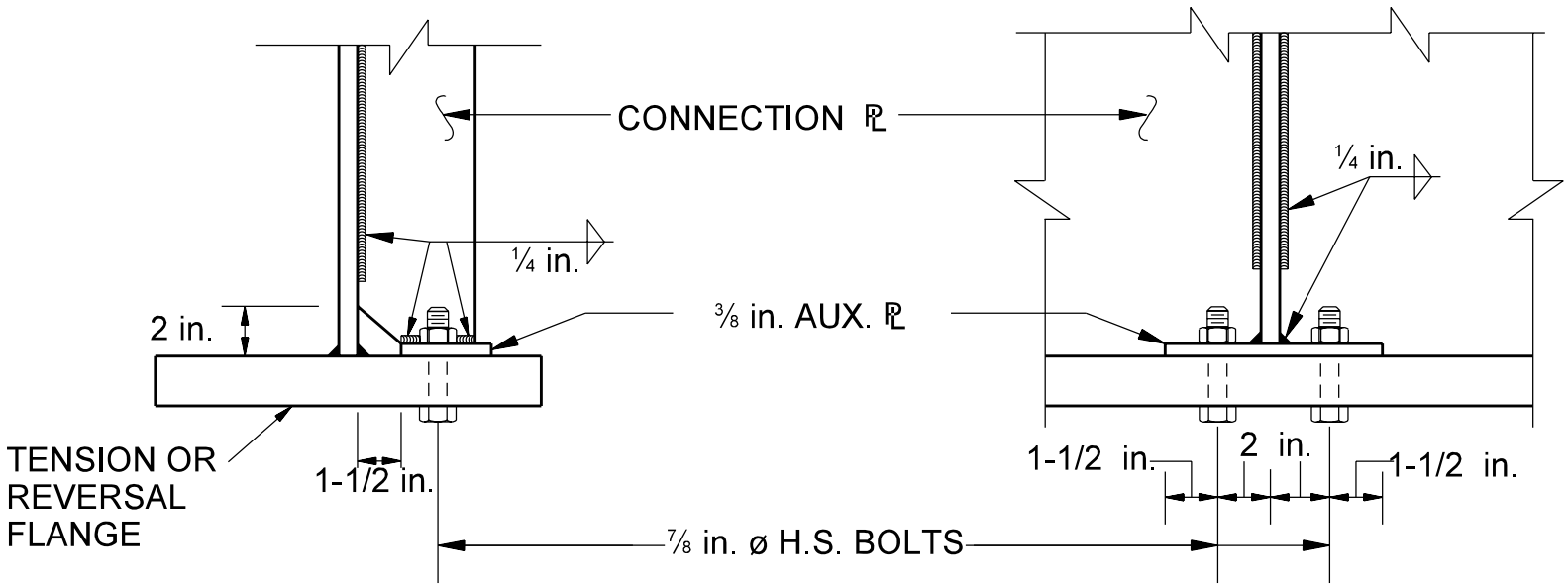

ALTERNATIVE CONNECTION PLATE ATTACHMENT AT
TENSION OR REVERSAL FLANGE

Figure 64-5E