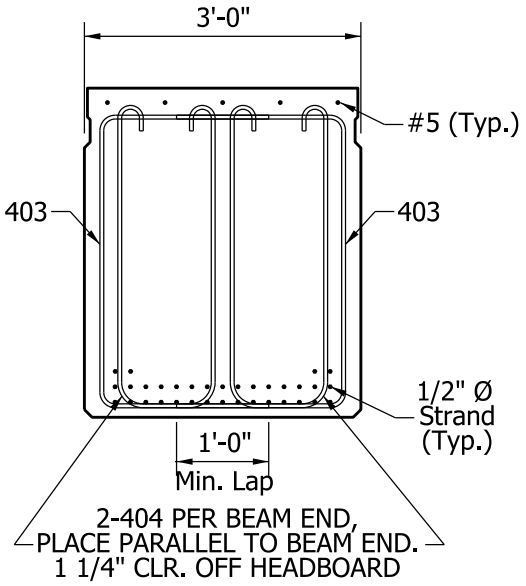

TYPICAL END REINFORCEMENT SECTION

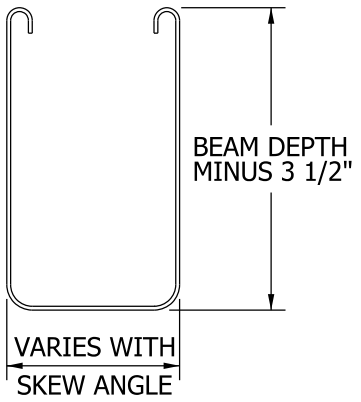

404 BAR

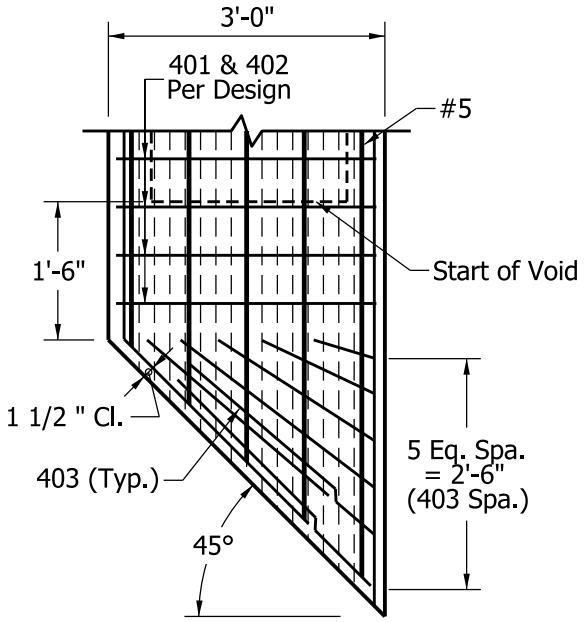

TYPICAL END REINFORCEMENT PLAN

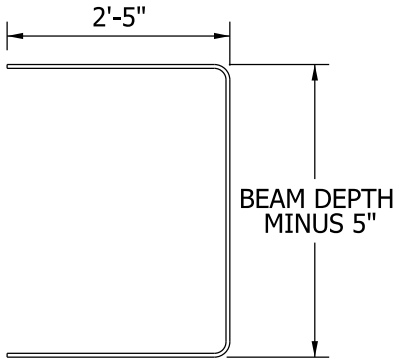

403 BAR

MILD REINFORCEMENT FOR 36 WIDTH SKEWED-BEAM END (45-deg Skew Shown)

Figure 63-16W