BEAM PROPERTIES

A_B = 878 in^2
I_B = 205,798 in^4
S_{TB} = 9,721 in^3
S_{BB} = 9,880 in^3
Y_{TB} = 21.17 in
Y_{BB} = 20.83 in
Wt. = 915 lbs/ft

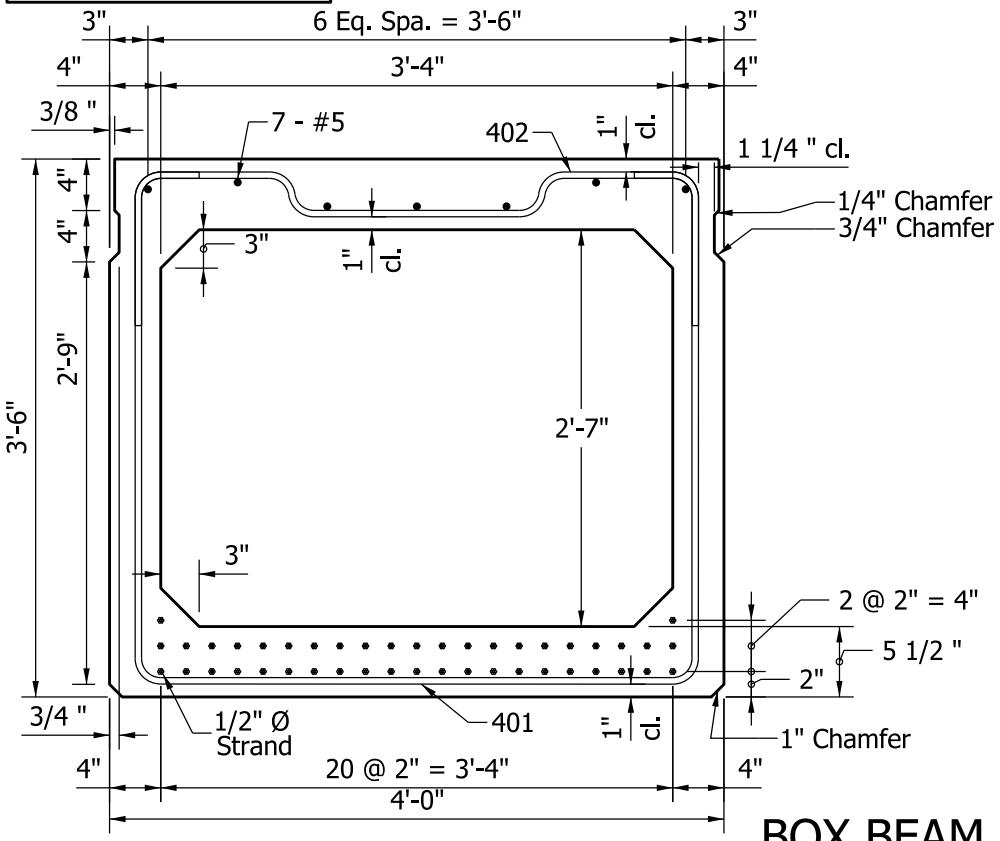

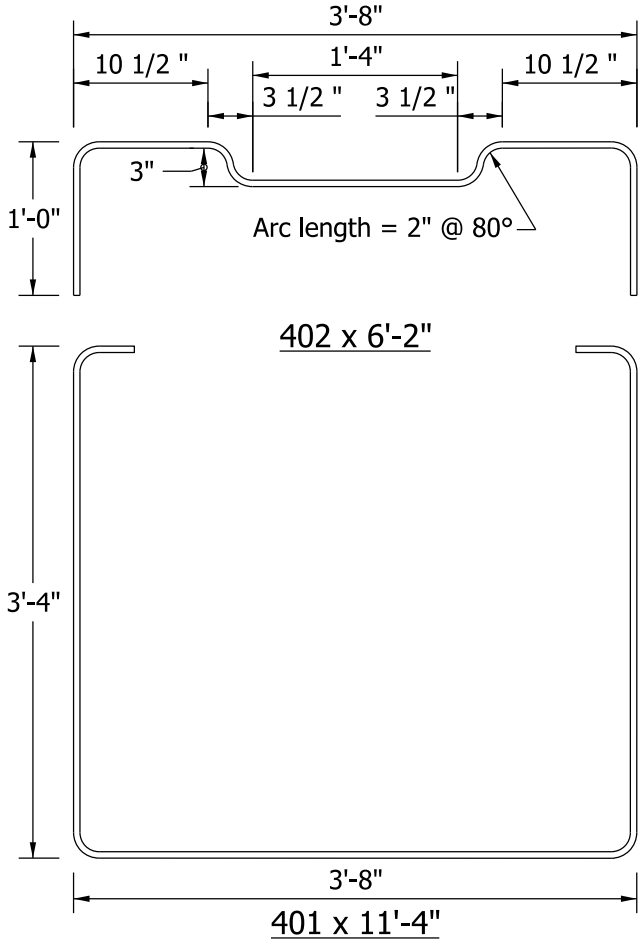

BOX BEAM
TYPE WS 42 x 48

Figure 63-15R