BEAM PROPERTIES

A_B = 779 in^2
I_B = 111,384 in^4
S_{TB} = 6,694 in^3
S_{BB} = 6,808 in^3
Y_{TB} = 16.64 in
Y_{BB} = 16.36 in
Wt. = 811 lbs/ft

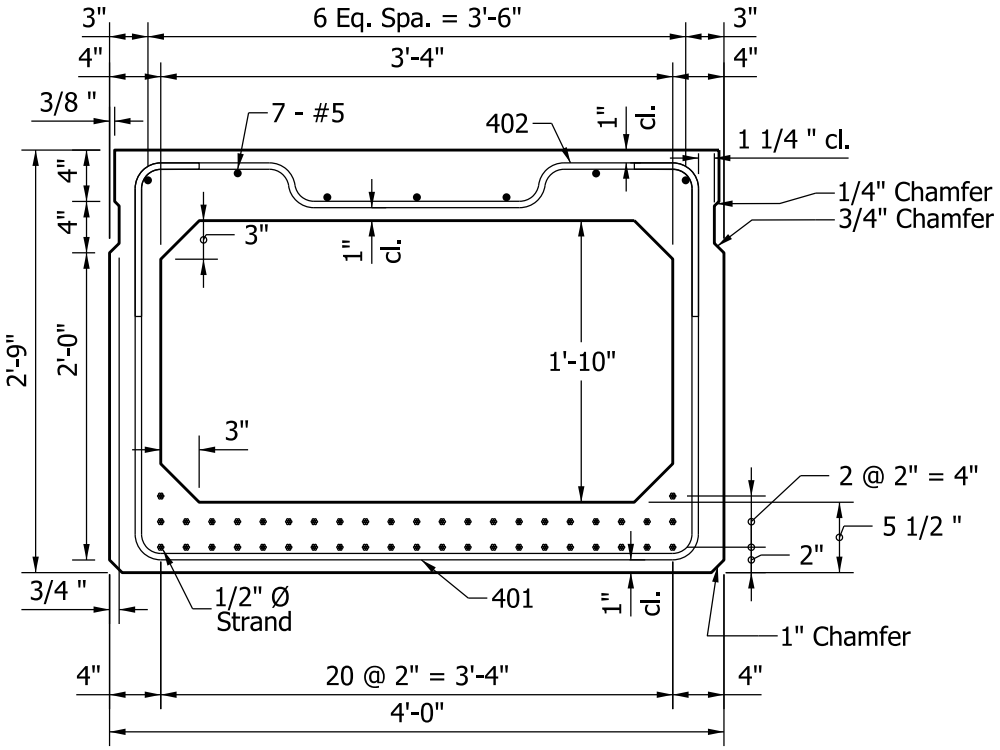

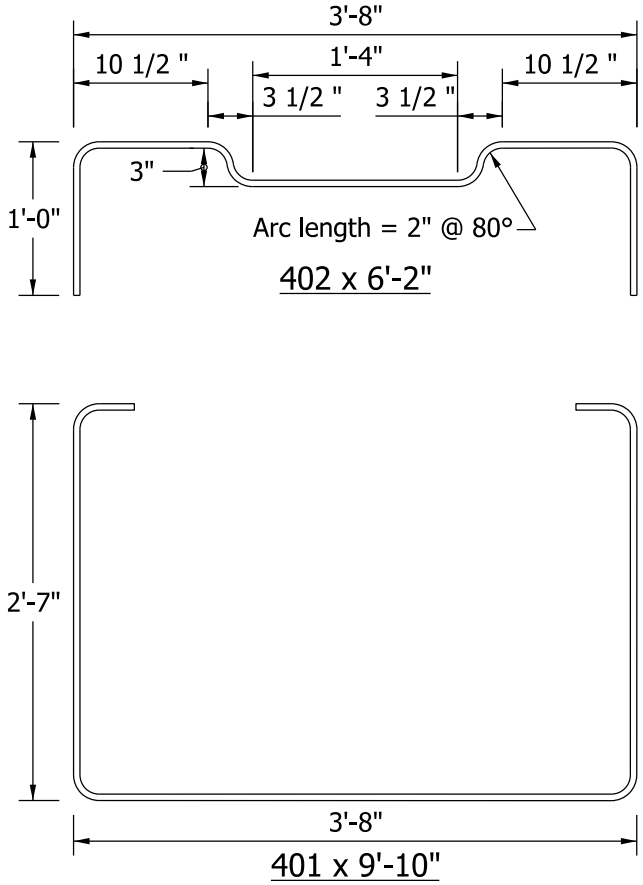

BOX BEAM
TYPE WS 33 x 48

Figure 63-15Q