BEAM PROPERTIES
A_B = 608 in^2
I_B = 32,826 in^4
S_{TB} = 3,199 in^3
S_{BB} = 3,056 in^3
Y_{TB} = 10.26 in
Y_{BB} = 10.74 in
Wt. = 633 lbs/ft

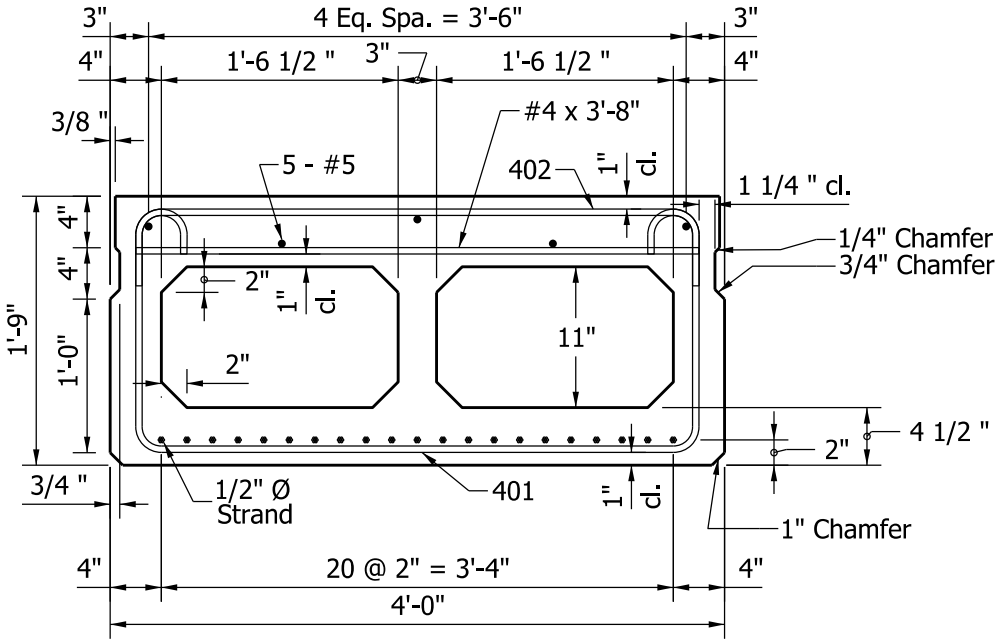

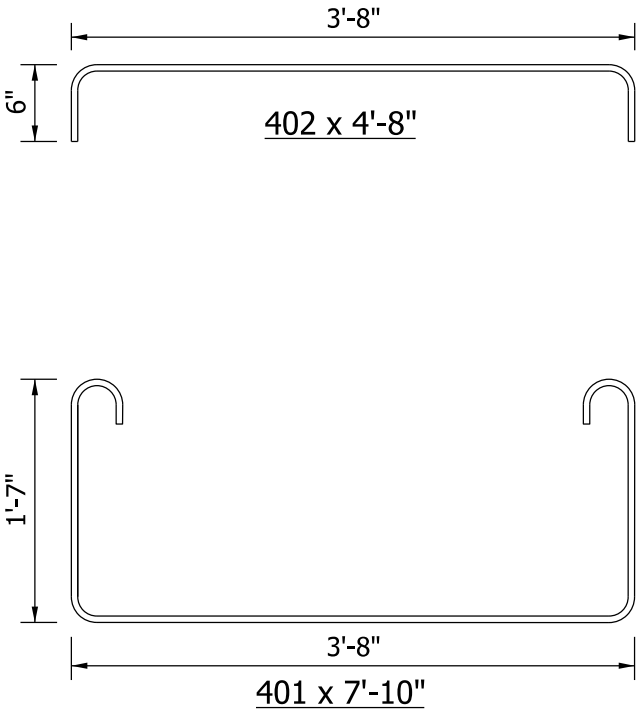

BOX BEAM
TYPE WS 21 x 48

Figure 63-15 O