BEAM PROPERTIES
A_B = 564 in^2
I_B = 18,467 in^4
S_{TB} = 2,212 in^3
S_{BB} = 2,135 in^3
Y_{TB} = 8.35 in
Y_{BB} = 8.65 in
Wt. = 588 lbs/ft

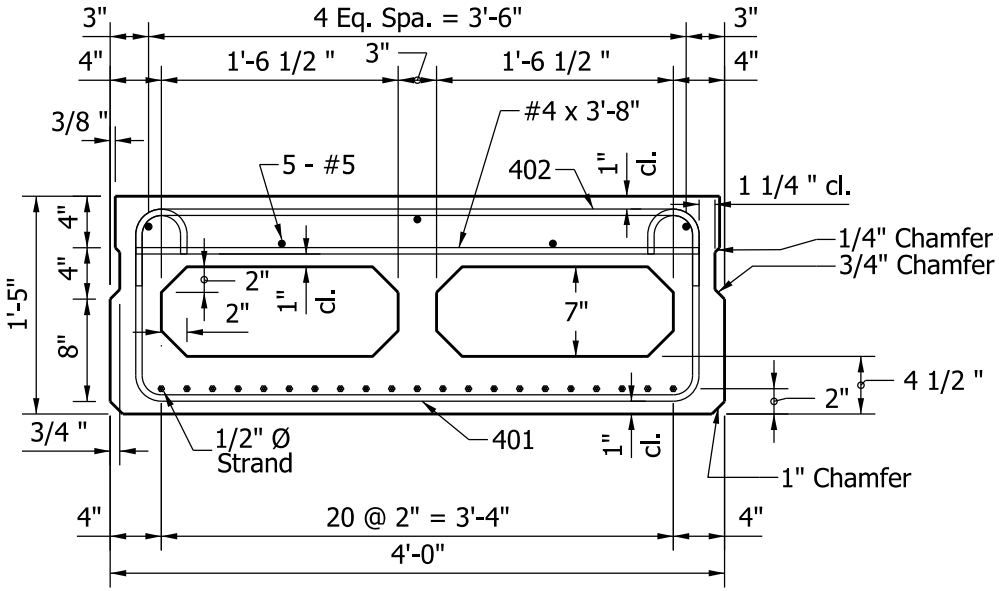

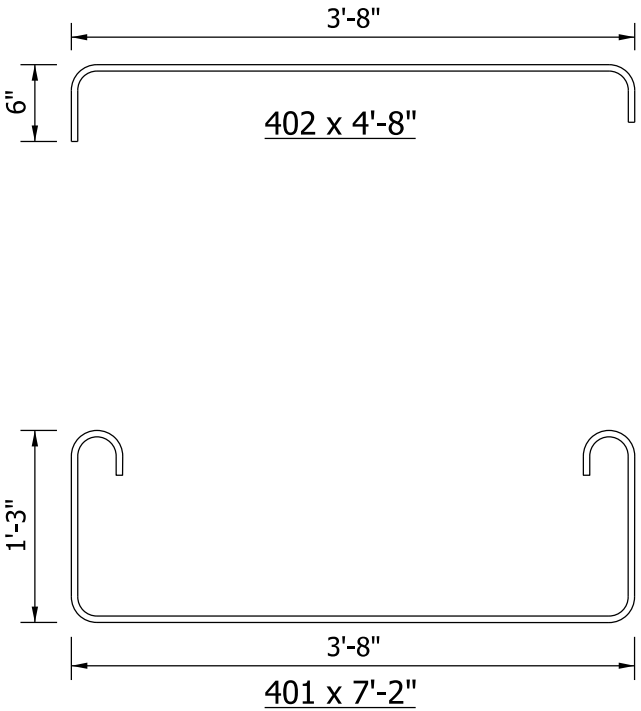

BOX BEAM
TYPE WS 17 x 48

Figure 63-15N