BEAM PROPERTIES
A_B = 471 in^2
I_B = 14,169 in^4
S_{TB} = 1,653 in^3
S_{BB} = 1,681 in^3
Y_{TB} = 8.57 in
Y_{BB} = 8.43 in
Wt. = 491 lbs/ft

NOTES:
1. ▩ *DENOTES EPOXY-COATED BAR

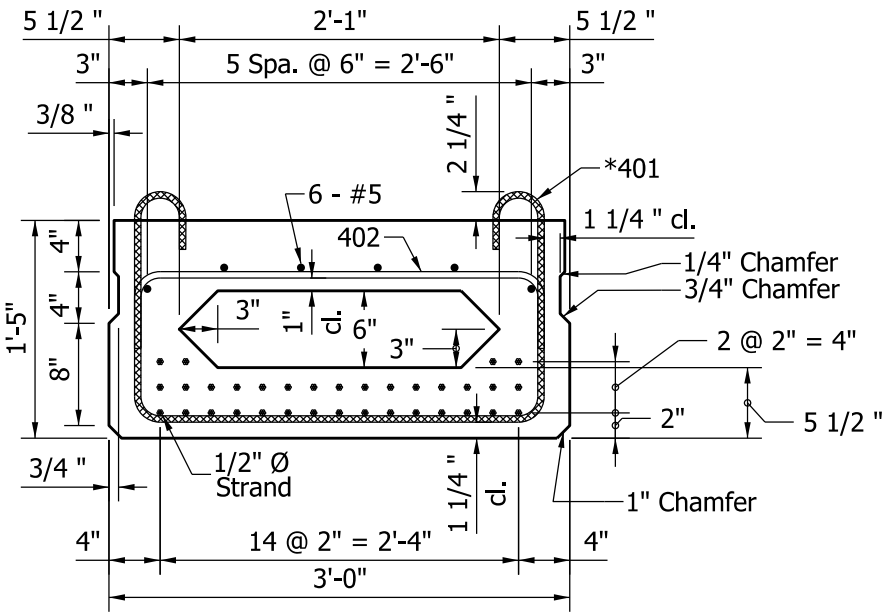

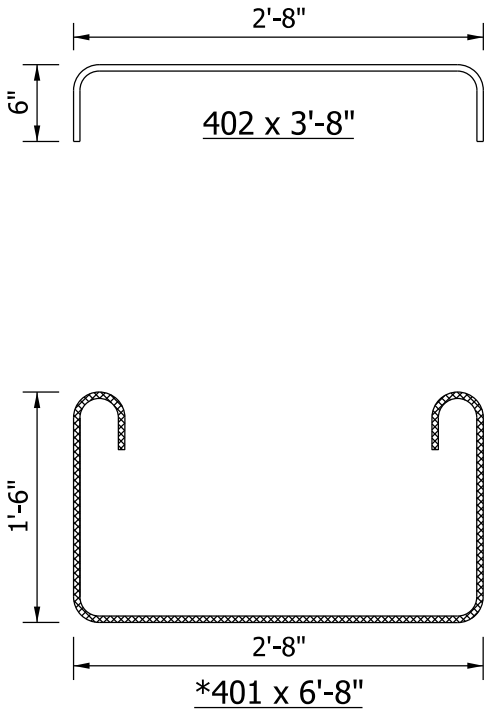

BOX BEAM
TYPE CB 17 x 36

Figure 63-15B