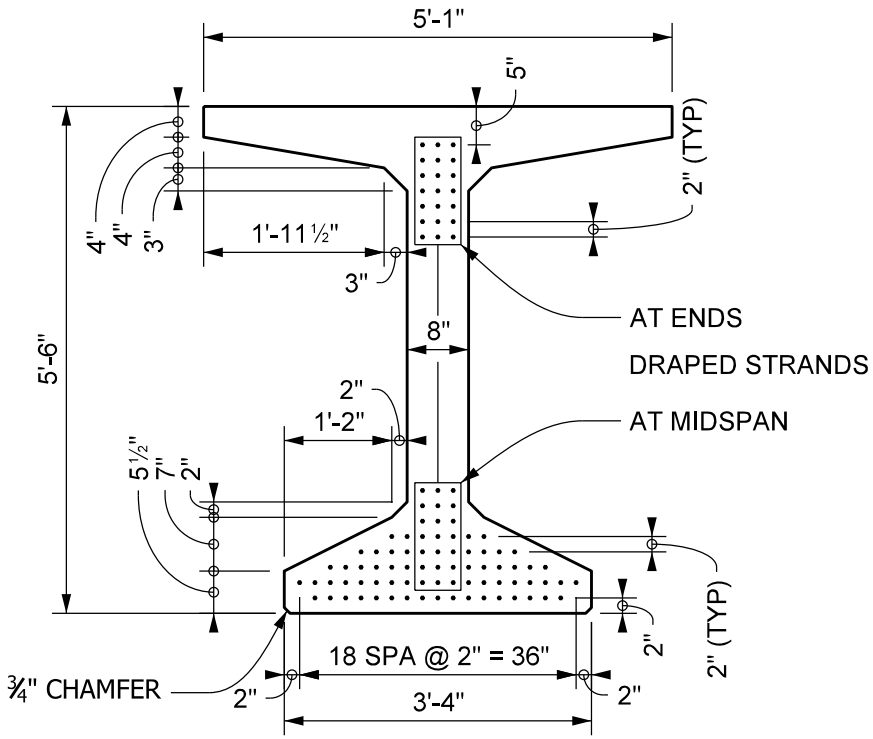

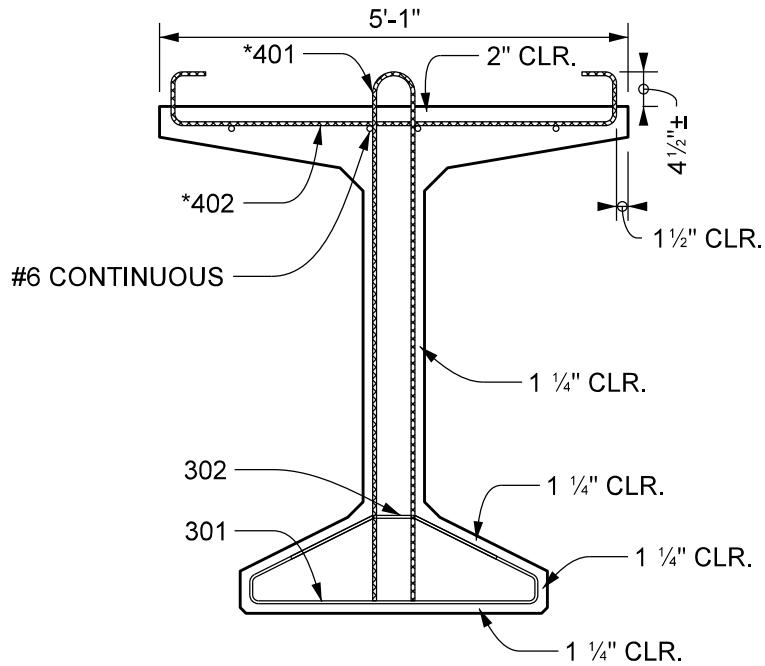

NOTES:
1. BARS 301 AND 302 COMBINED TO FORM ONE STIRRUP.
2. ▩*DENOTES EPOXY-COATED BARS
3. LOCATE HOLDDOWNS 5'-0" EACH SIDE OF CENTER LINE OF BEAM.

BULB-TEE BEAM TYPE BT 66 x 61
SECTIONS SHOWING PRESTRESSING AND MILD REINFORCING STEEL

Figure 63-14X(1)