* DENOTES EPOXY-COATED BARS

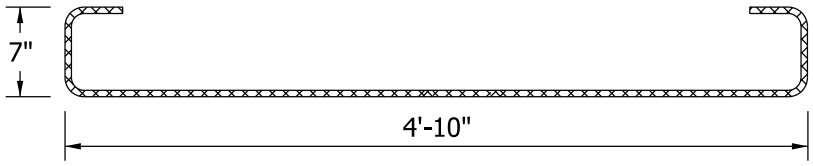

*402

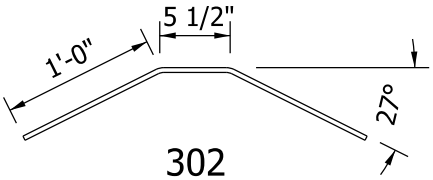

302

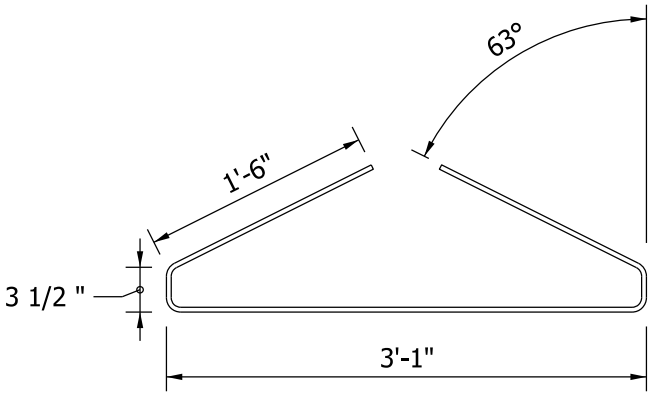

301

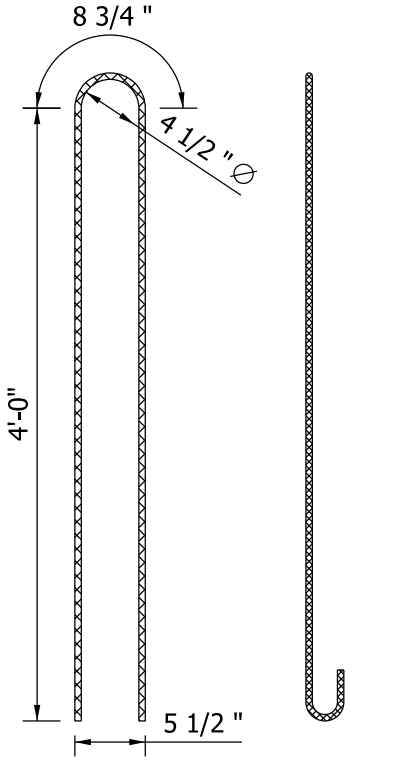

END VIEW
*401

SIDE VIEW
*401

BULB - TEE BEAM
TYPE BT 48 x 61
BAR BENDING DETAILS

Figure 63-14U(2)