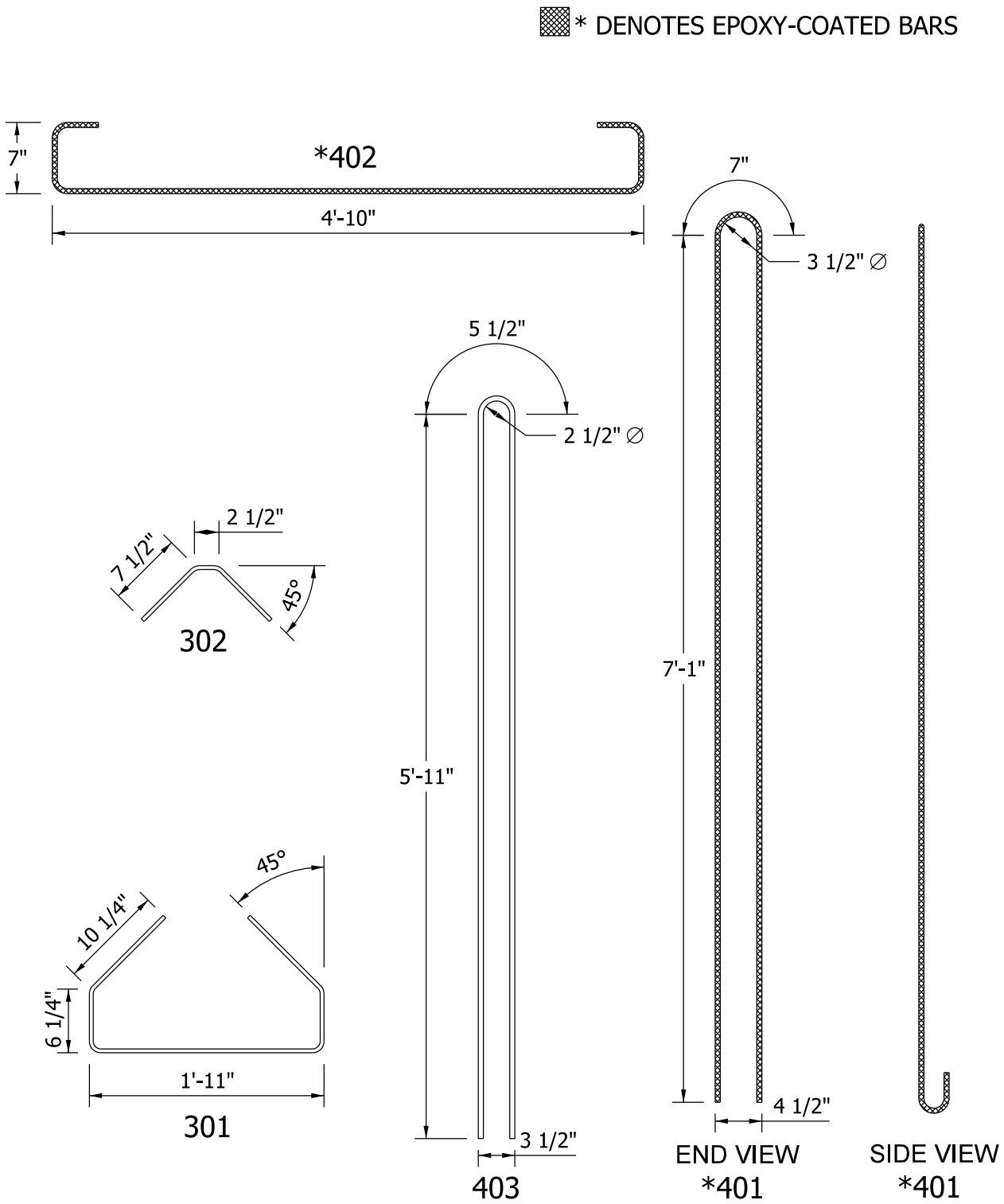

BULB - TEE BEAM
TYPE BT 84 x 60
BAR BENDING DETAILS

Figure 63-14R(2)