BEAM PROPERTIES

A_B = 976 in^2
I_B = 478,833 in^2
S_{TB}= 18,180 in^3
S_{BB}= 14,223 in^3
Y_{TB}= 26.3 in
Y_{BB}= 33.7 in
Wt. = 1017 lb/lf

NOTES:
1. BARS 301 AND 302 COMBINED TO FORM ONE STIRRUP.
2. ▩*DENOTES EPOXY-COATED BARS

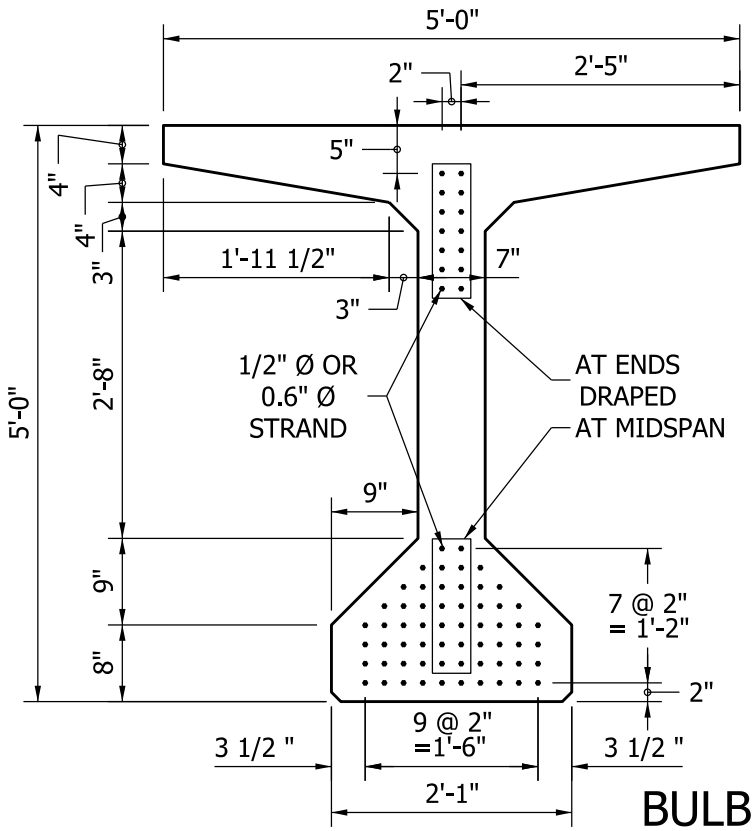

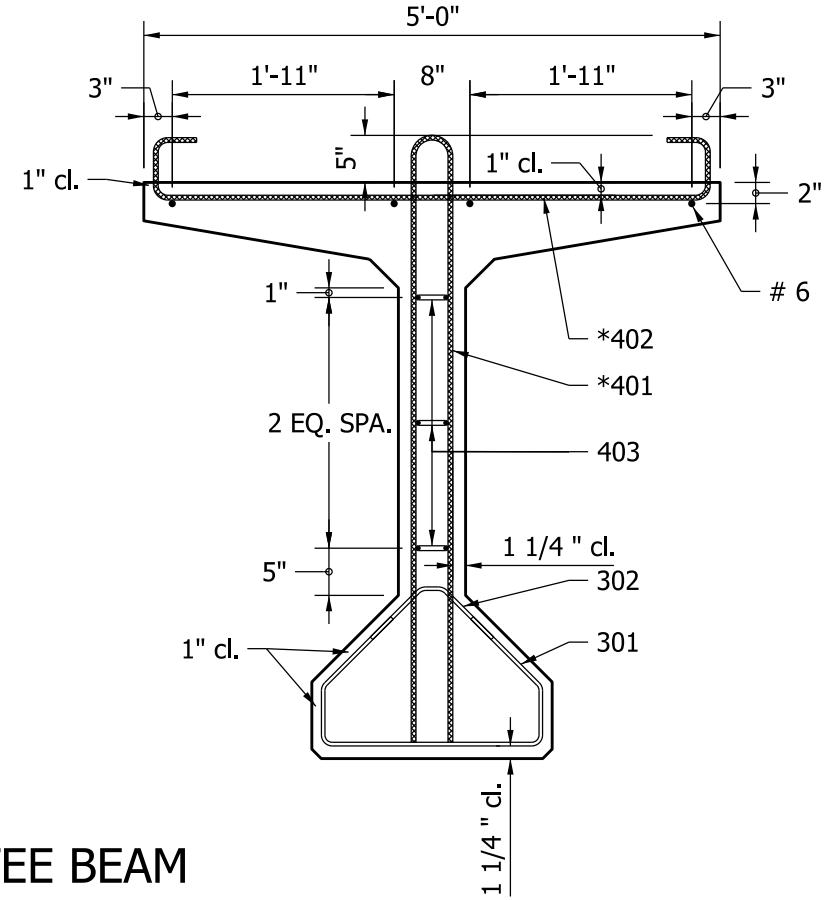

BULB - TEE BEAM
TYPE BT 60 x 60

Figure 63-14N(1)