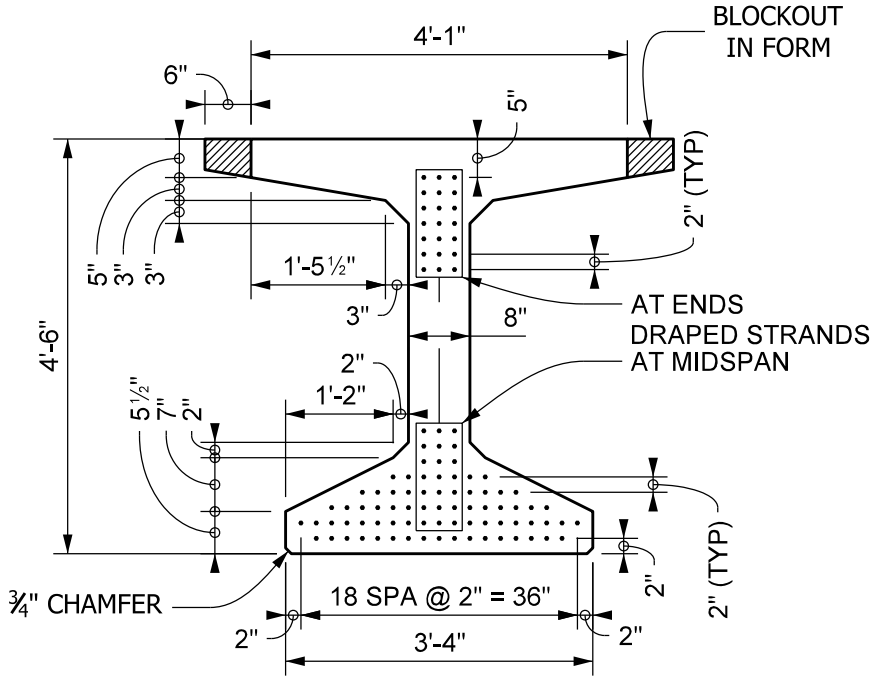

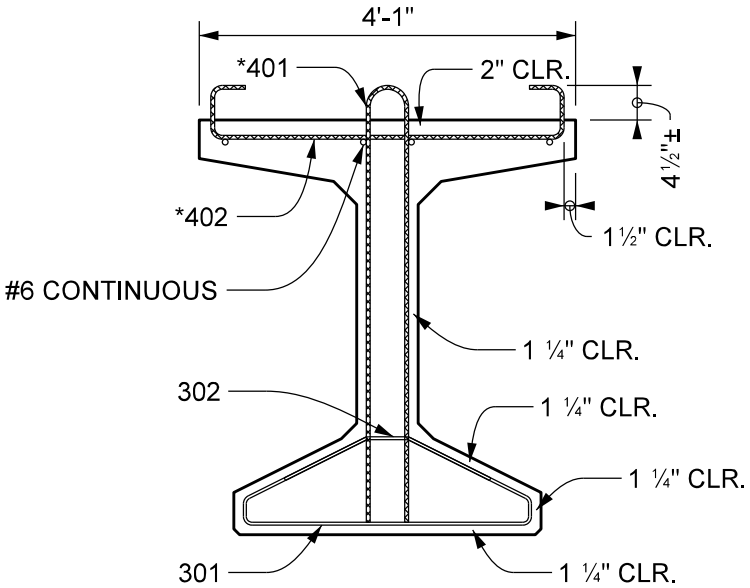

NOTES:
1. BARS 301 AND 302 COMBINED TO FORM ONE STIRRUP.
2. ▩ *DENOTES EPOXY-COATED BARS
3. LOCATE HOLDDOWNS 5'-0" EACH SIDE OF CENTER LINE OF BEAM.

BULB-TEE BEAM TYPE BT 54 x 49
SECTIONS SHOWING PRESTRESSING AND MILD REINFORCING STEEL

Figure 63-14J(1)