* DENOTES EPOXY-COATED BARS

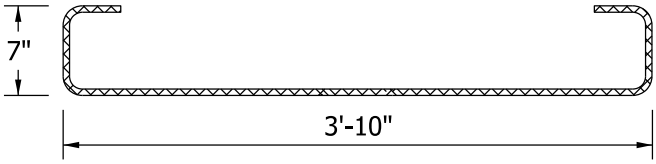

*402

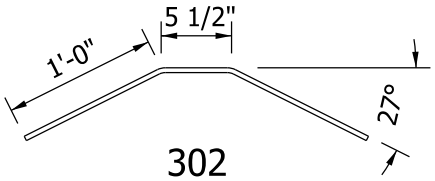

302

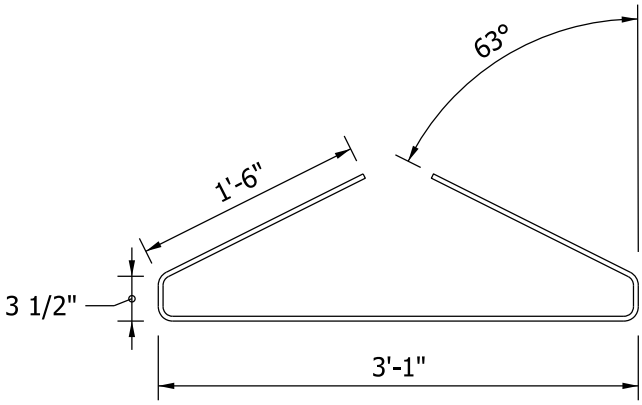

301

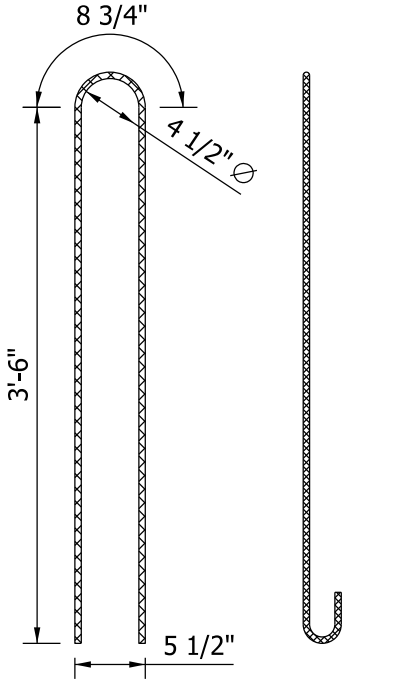

END VIEW *401

SIDE VIEW *401

BULB - TEE BEAM
TYPE BT 42 x 49
BAR BENDING DETAILS

Figure 63-14H(2)