BEAM PROPERTIES

A_B = 1058 in^2
I_B = 871,279 in^2
S_{TB} = 24,000 in^3
S_{BB} = 20,896 in^3
Y_{TB} = 36.3 in
Y_{BB} = 41.7 in
Wt. = 1102 lb/lf

NOTES:
1. BARS 301 AND 302 COMBINED TO FORM ONE STIRRUP.
2. ▩ *DENOTES EPOXY-COATED BARS

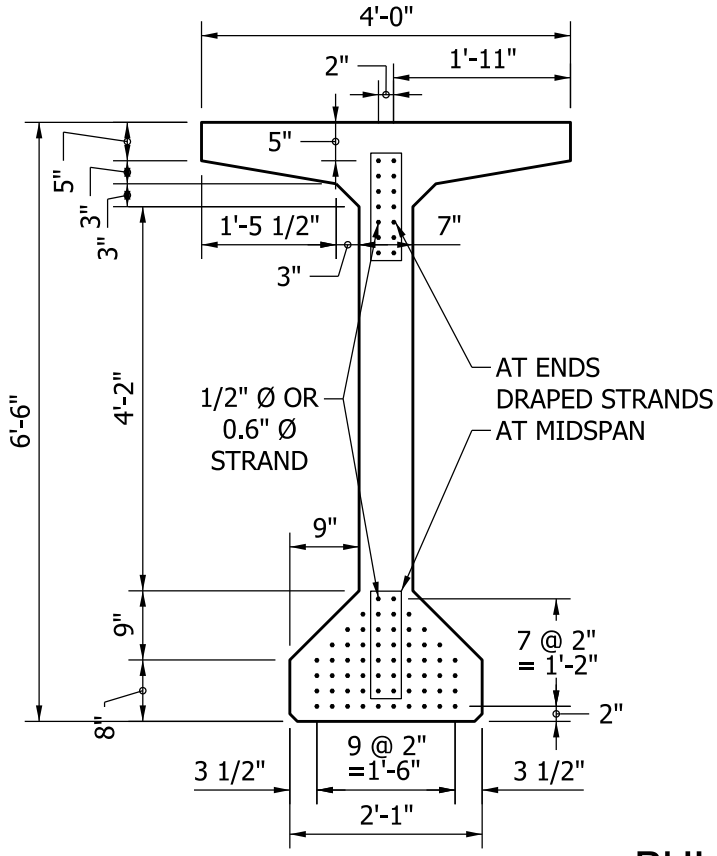

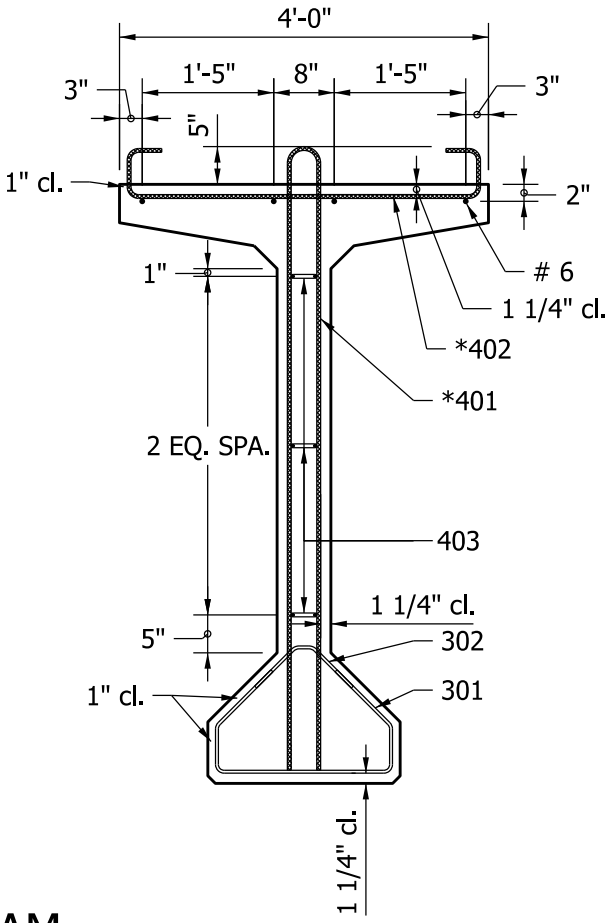

BULB - TEE BEAM
TYPE BT 78 x 48

Figure 63-14E(1)