BEAM PROPERTIES

A_B = 1016 in^2
I_B = 712,670 in^2
S_{TB} = 21,354 in^3
S_{BB} = 18,451 in^3
Y_{TB} = 33.4 in
Y_{BB} = 38.6 in
Wt. = 1058 lb/lf

NOTES:
1. BARS 301 AND 302 COMBINED TO FORM ONE STIRRUP.
2. ▩ *DENOTES EPOXY-COATED BARS

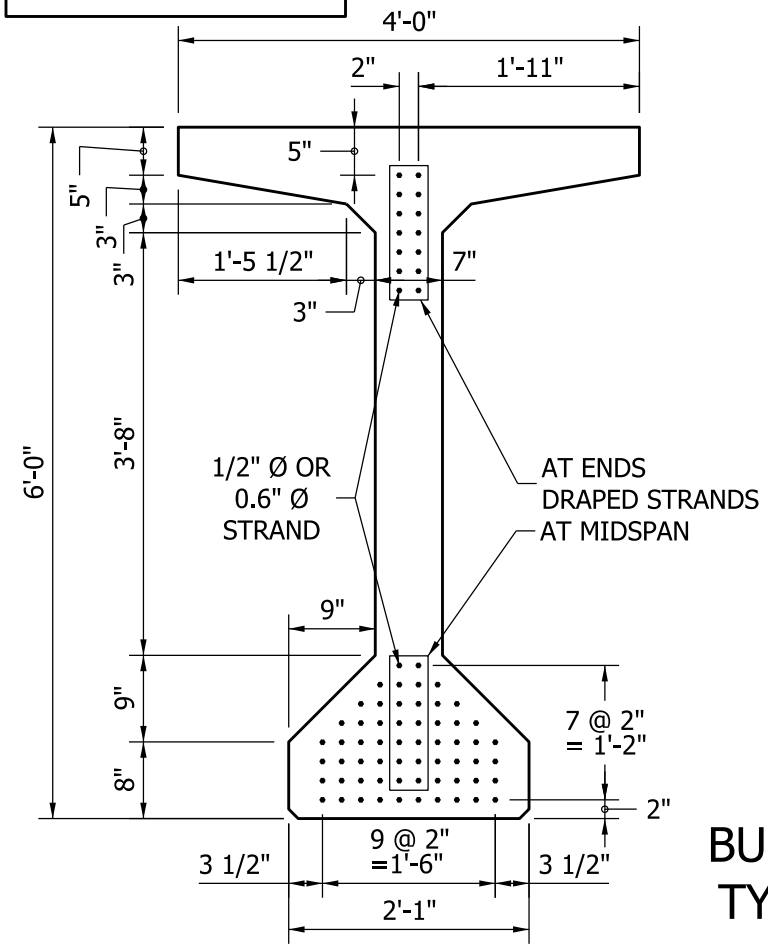

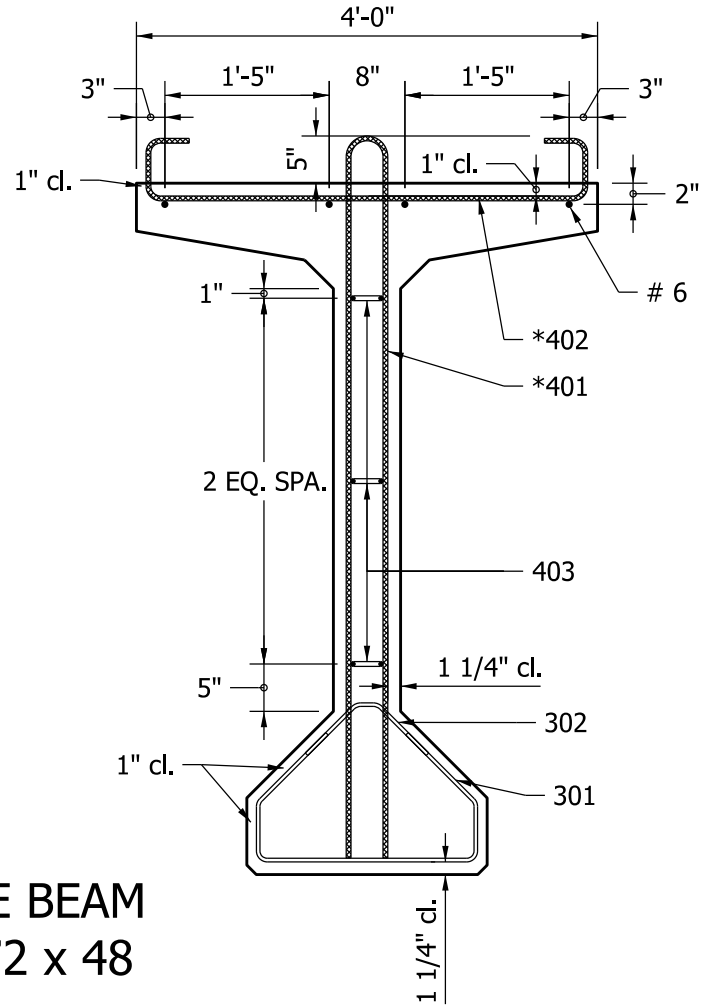

BULB - TEE BEAM
TYPE BT 72 x 48

Figure 63-14D(1)