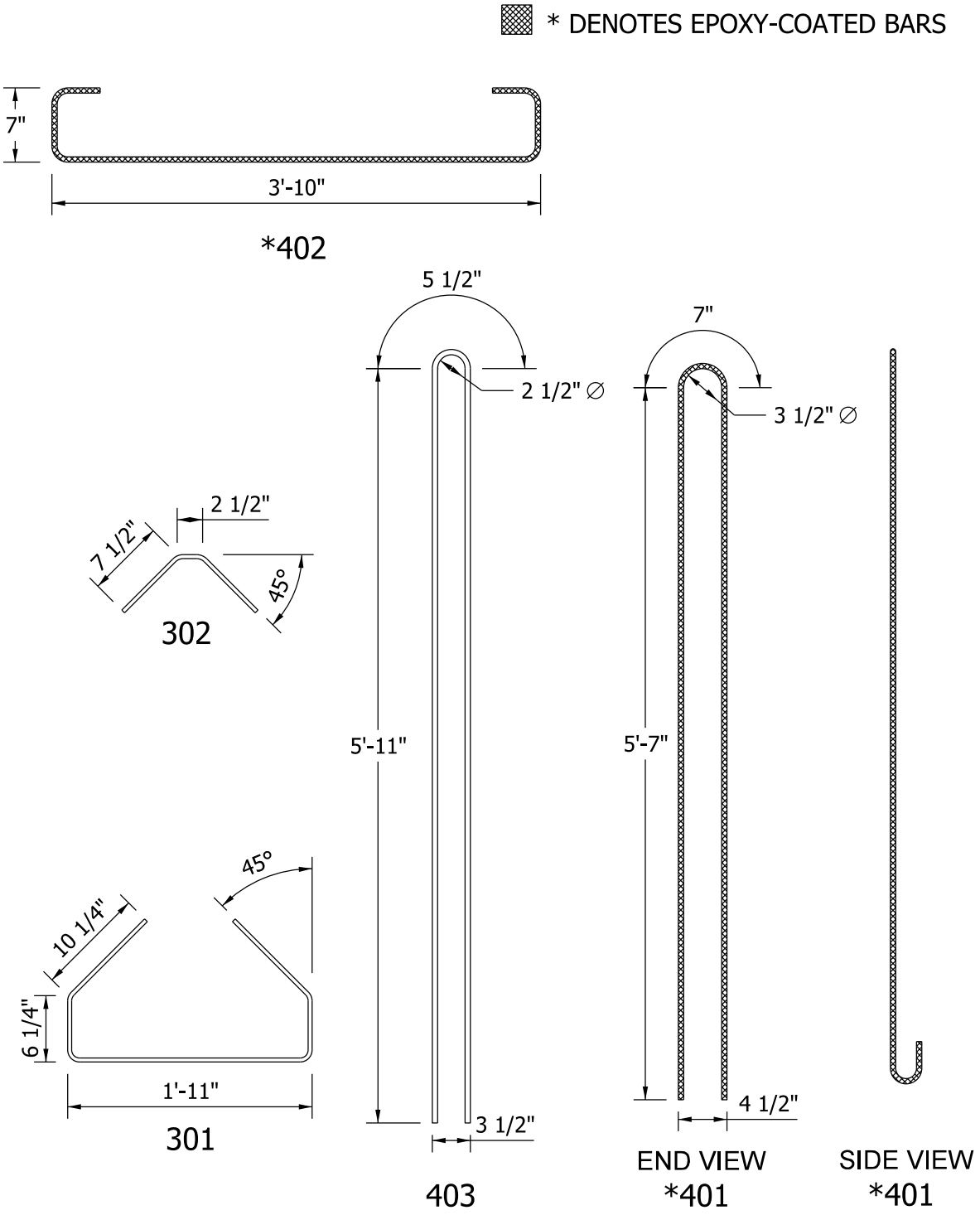

BULB - TEE BEAM
TYPE BT 66 x 48
BAR BENDING DETAILS

Figure 63-14C(2)