BEAM PROPERTIES

A_B = 932 in^2
I_B = 449,526 in^2
S_{TB} = 16,324 in^3
S_{BB} = 13,847 in^3
Y_{TB} = 27.5 in
Y_{BB} = 32.5 in
Wt. = 971 lb/lf

NOTES:
1. BARS 301 AND 302 COMBINED TO FORM ONE STIRRUP.
2. ▩ *DENOTES EPOXY-COATED BARS

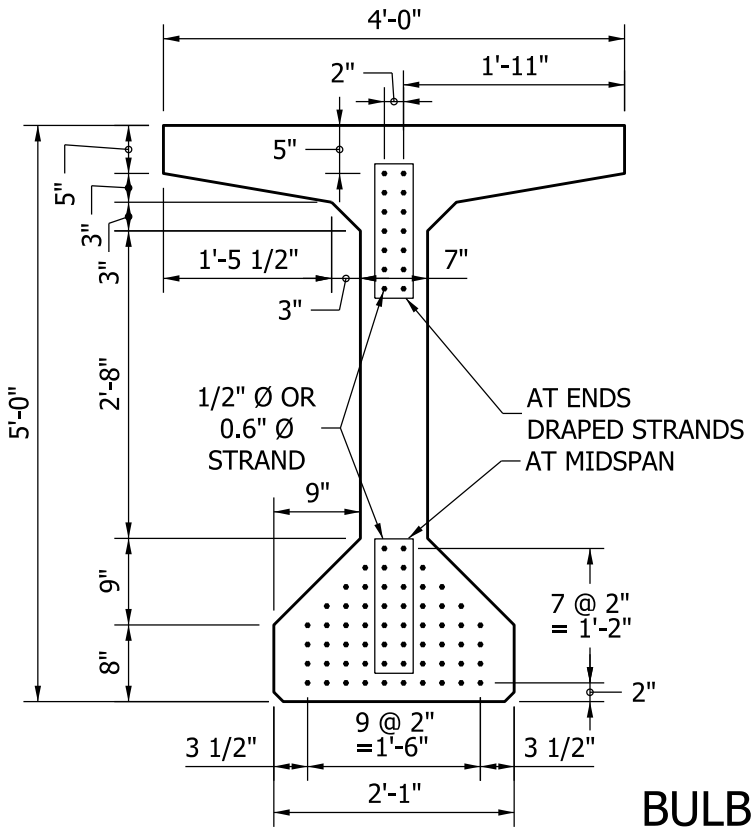

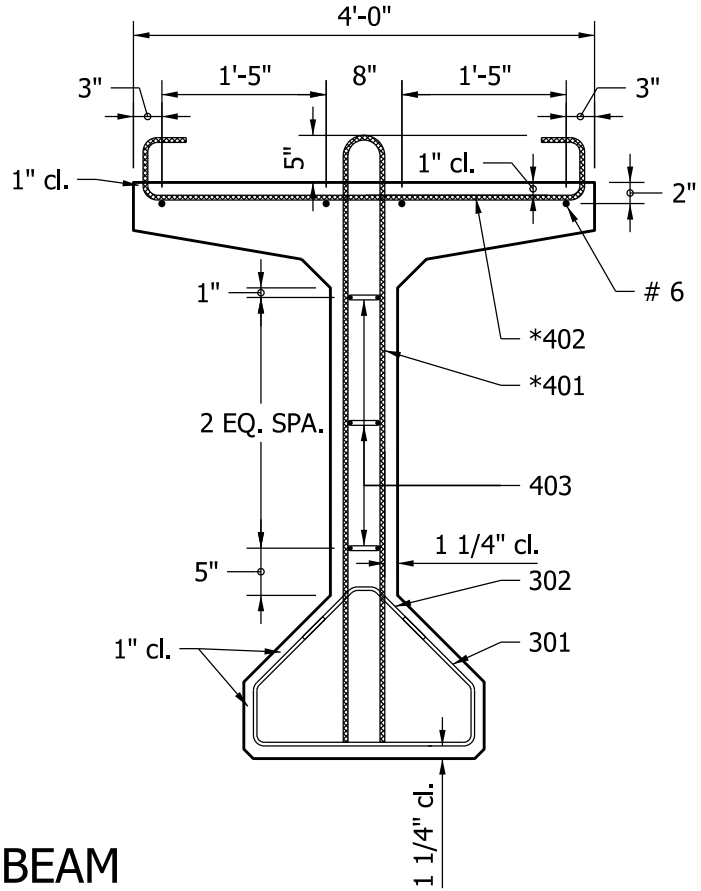

BULB - TEE BEAM
TYPE BT 60 x 48

Figure 63-14B(1)