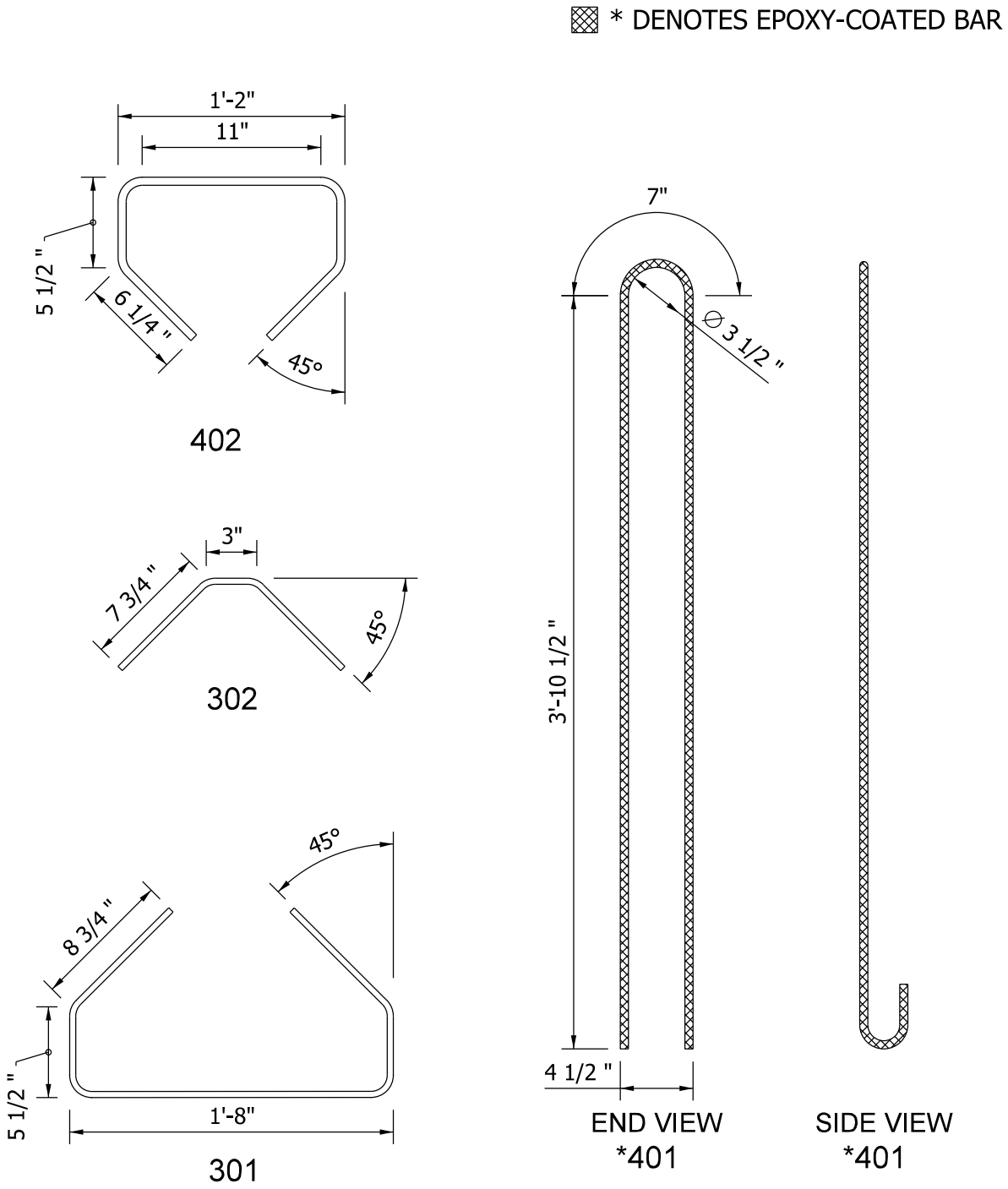

I - BEAM TYPE III
BAR BENDING DETAILS

Figure 63-13C(2)