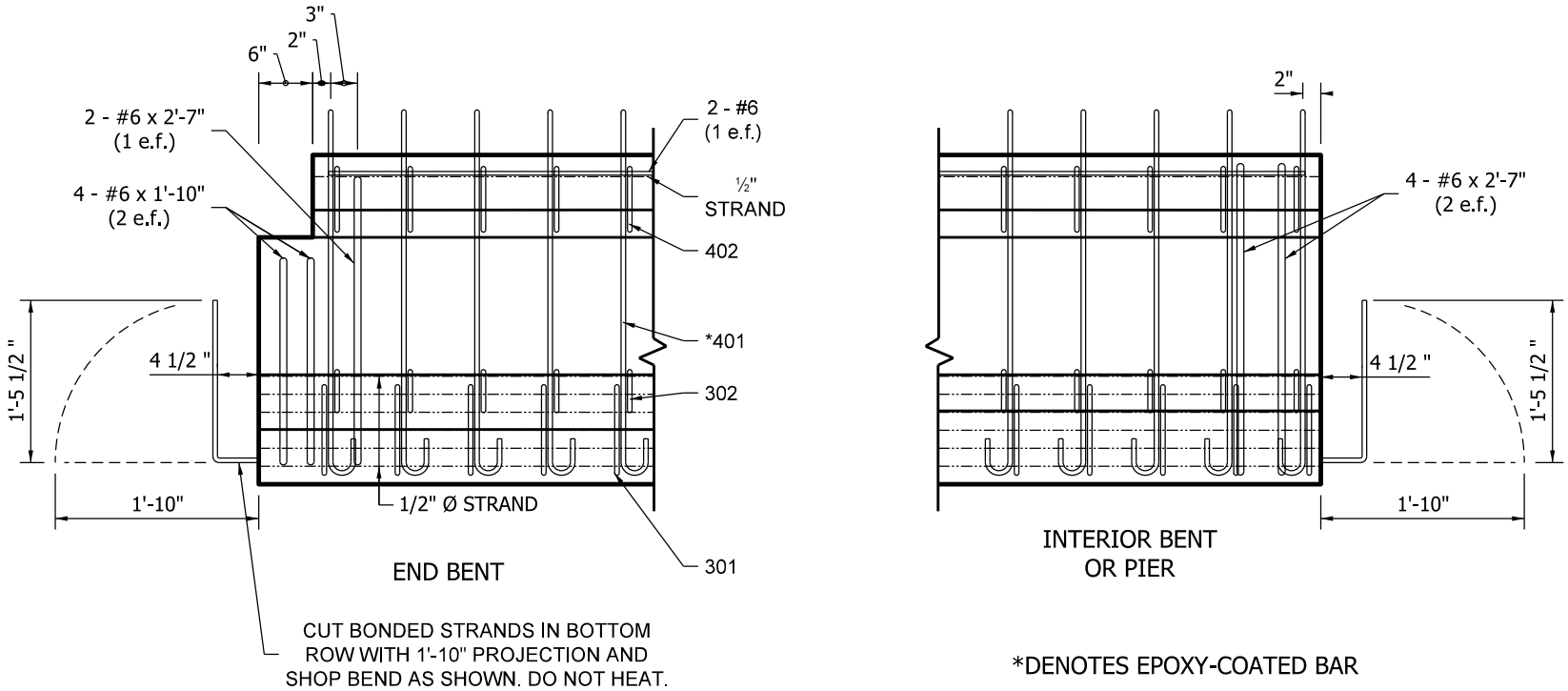

I - BEAM TYPE II
ELEVATIONS SHOWING END REINFORCEMENT

Figure 63-13B(3)