BEAM PROPERTIES

A_B = 369 in.^{2}
I_B = 50,979 in.^{4}
S_{TB} = 2,527 in.^{3}
S_{BB} = 3,221 in.^{3}
Y_{TB} = 20.2 in.
Y_{BB} = 15.8 in.
Wt. = 384 lb/lf

NOTES:
1. BARS 301 AND 302 COMBINED TO FORM ONE STIRRUP.

2. ▩ *DENOTES EPOXY-COATED BAR

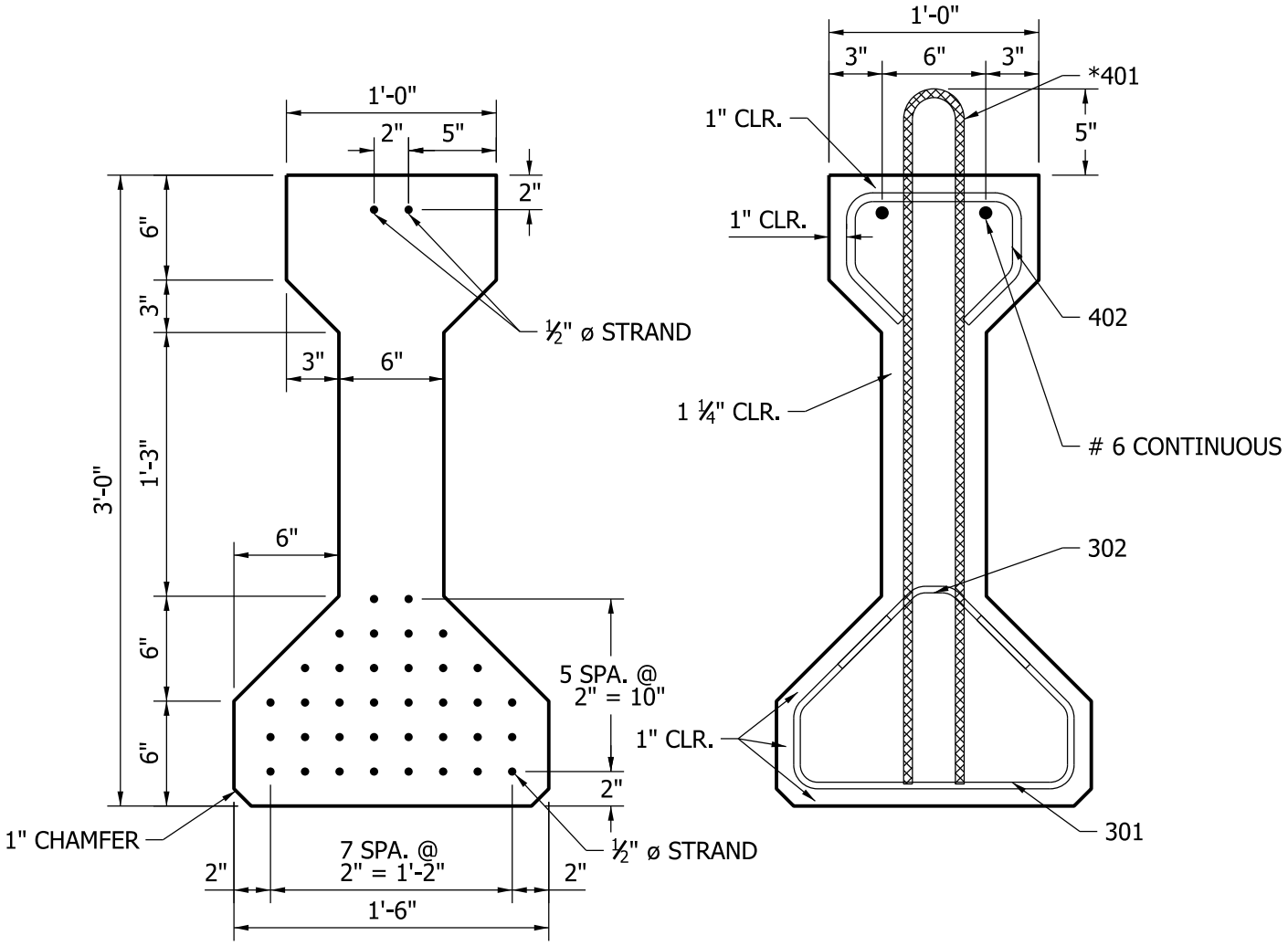

I - BEAM TYPE II

Figure 63-13B(1)