* DENOTES EPOXY-COATED BAR

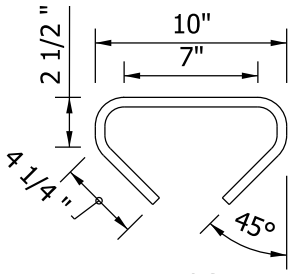

402

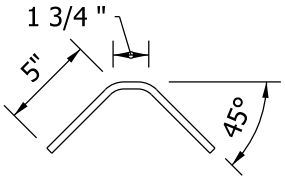

302

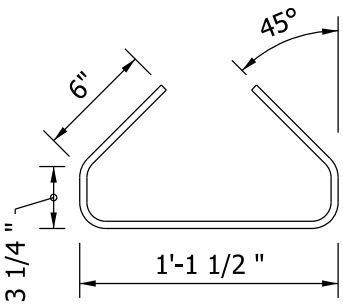

301

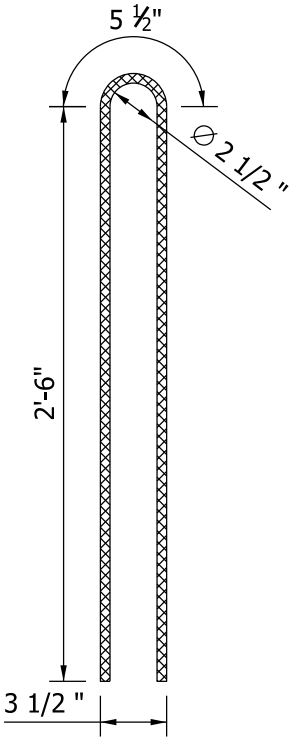

END VIEW
*401

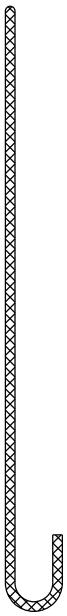

SIDE VIEW
*401

I - BEAM TYPE I
BAR BENDING DETAILS

Figure 63-13A(2)