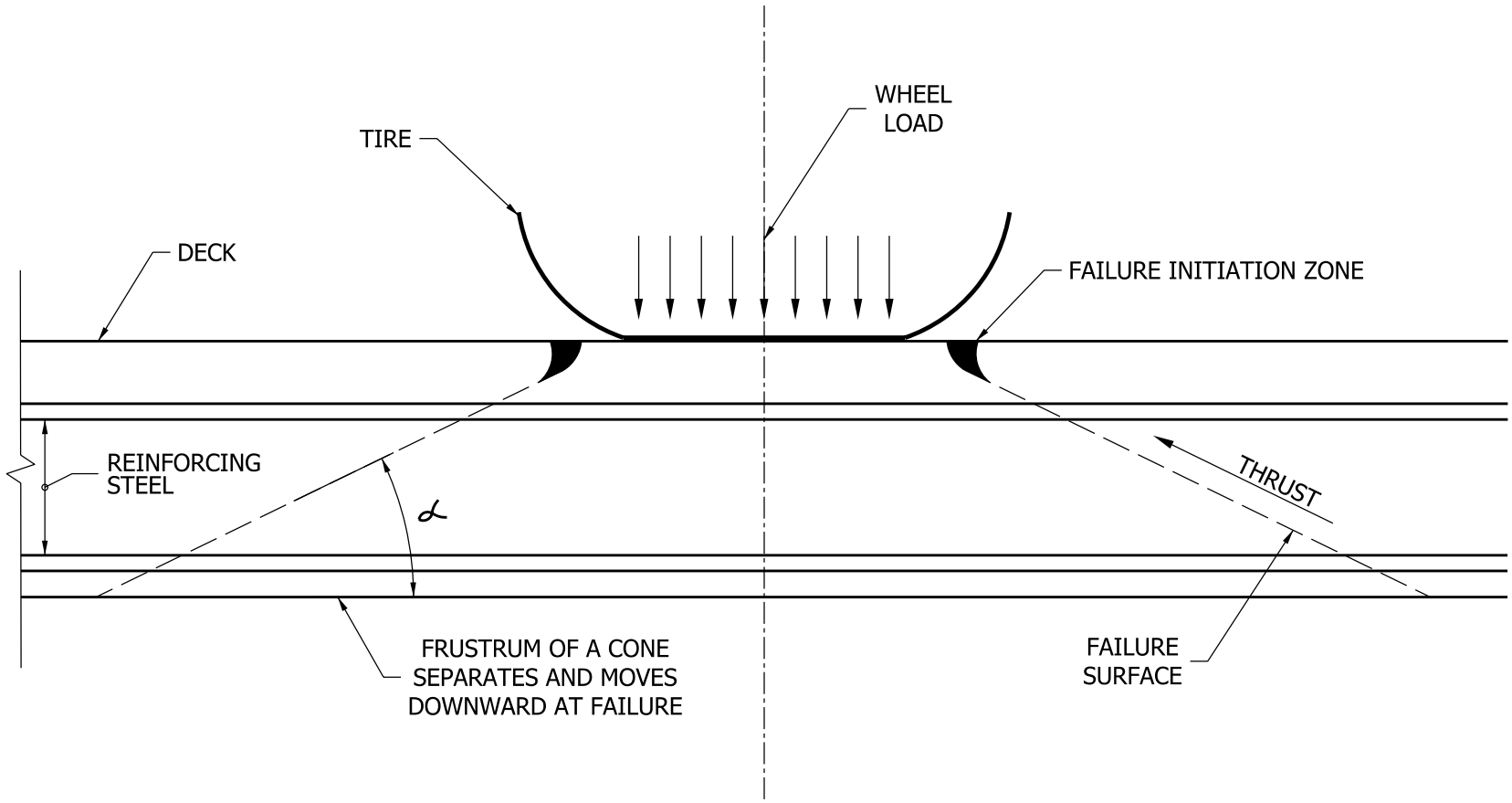


PUNCHING SHEAR FAILURE MECHANISM IN CONCRETE DECK

Figure 61-3A