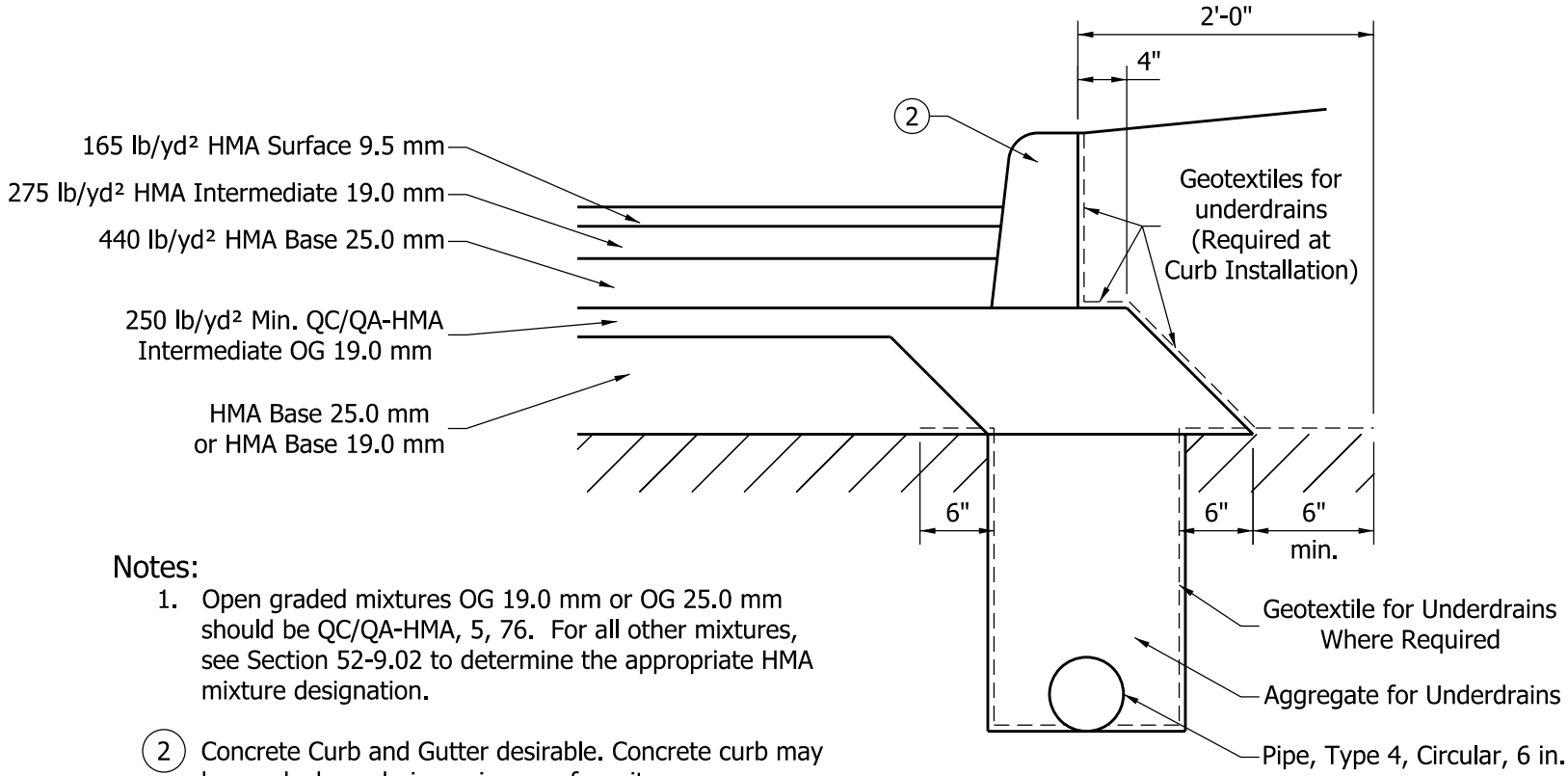


Notes:

1. Open graded mixtures OG 19.0 mm or OG 25.0 mm should be QC/QA-HMA, 5, 76. For all other mixtures, see Section 52-9.02 to determine the appropriate HMA mixture designation.

(2) Concrete Curb and Gutter desirable. Concrete curb may be used where drainage is away from it.

# HMA PAVEMENT WITH CONCRETE CURB AND UNDERDRAIN

Figure 52-13V