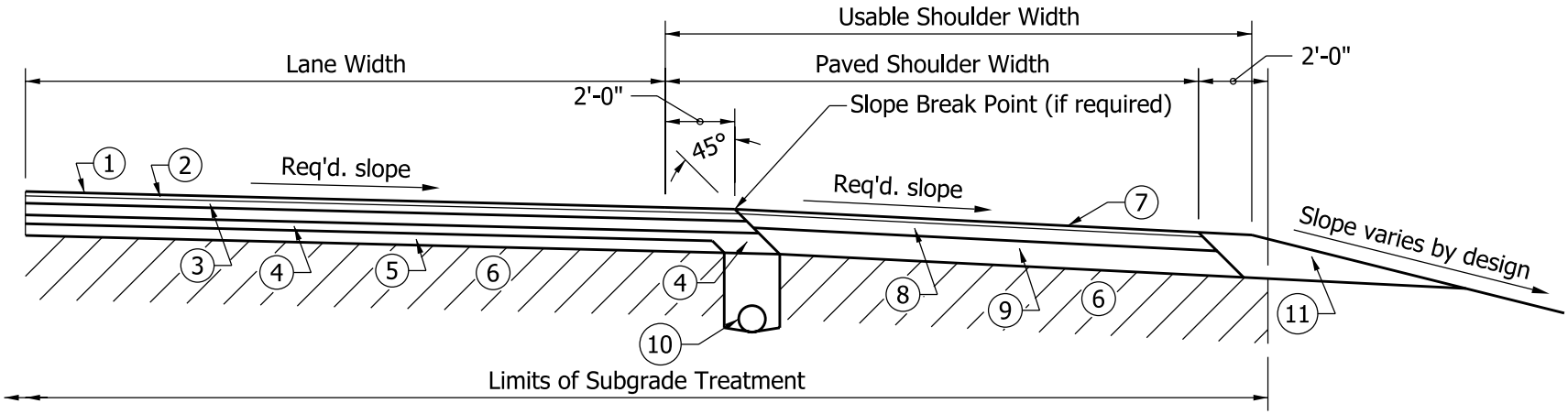

Mainline

1. 165 lb/yd² HMA Surface 9.5 mm
2. 275 lb/yd² HMA Intermediate 19.0 mm
3. _____ lb/yd² HMA Base
4. _____ lb/yd² QC/QA-HMA Intermediate OG
5. _____ lb/yd² HMA Base
6. Subgrade Treatment, Type _____
10. Pipe, Type 4, Circular, 6 in.

Layer No.	Course	Layers, lb/yd²	Aggregate Size, mm
3	Base	330	19
4	Intermediate OG	250	19
5	Base	440	25
		330	19

* Shoulders

7. 165 lb/yd² HMA Surface 9.5 mm
8. 495 lb/yd² HMA Base 25.0 mm
9. Compacted Aggregate, Size No. 53, Base
   (Depth equals mainline HMA thickness minus 6 in.)
11. Variable-Depth Compacted Aggregate, Size No. 53

* Open graded mixture OG19.0 mm should be QC/QA-HMA, 5, 76. For all other mixtures, see Section 52-9.02to determine the appropriate HMA mixture designation.

FULL-DEPTH HMA PAVEMENT WITH COMPOSITE SHOULDER

Figure 52-13B