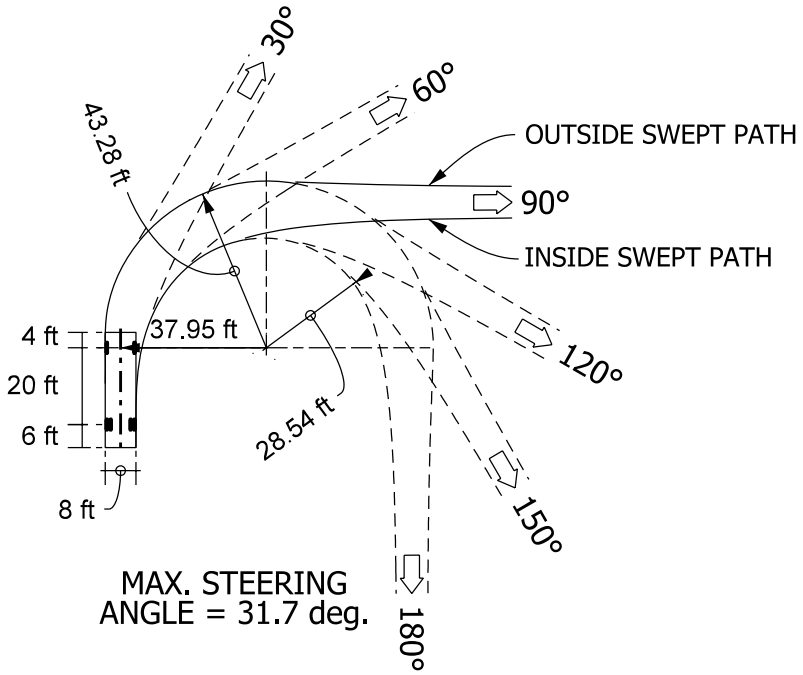

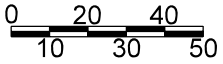

SU - DESIGN VEHICLE
(1" = 50' SCALE)

Figure 46 -12D