ROUTE: _____ DES. NO.: _____ PROJECT NO.: _____
DESCRIPTION: _____
Prepared By: _____ Date: _____ Checked By: _____ Date: _____

Definition Sketch

Definition Sketch for Riprap Size Particle Erosion

Q_{TOTAL} _____
Q_{MC} _____
Q_{LB} _____
Q_{RB} _____

Soil Characteristics:
D_{15} _____
D_{50} _____
D_{85} _____

DEPTH OR W.S. (ft) (1)	A (ft^2) (2)	V_g (ft/s) (3)	d_a (ft) (4)	θ (5)	Φ (6)	K_1 (7)	D_{50} (in.) (8)	SF (9)	S_S (10)	C (11)	$C_{P/A}$ (12)	D_{50} (in.) (13)	NOTES

Design Sketch

RIPRAP CHARACTERISTICS:
Size: _____ Thickness: _____
D_{50} _____ $2D_{50}$ _____
Class _____ D_{100} _____
AASHTO Use _____
Gradation:

Size: (in.)	Percent Finer
_____	100
_____	50
_____	5-10

FABRIC CHARACTERISTICS:
Granular:

Size: (in.)	Percent Finer
_____	100
_____	50
_____	5-10

Fabric: AOS < _____ mils
Perm. > _____ mils

(1) Water surface elevation
(2) Main channel flow area
(3) Main channel average velocity
(4) Main channel average depth
(5) Bank angle
(6) Riprap angle of repose (Fig. 38-6C)
(7) Bank angle correction (Fig. 38-6B)
(8) Riprap size (Fig. 38-6A)
(9) Stability factor
(10) Riprap specific gravity
(11) Riprap size correction factor (Fig. 38-6E)
(12) Pier/abutment correction (3.38 if applicable)
(13) Correction D_{50} = (8) x (11) x (12)

RIPRAP SIZE PARTICLE EROSION

Click When Done Clear Data

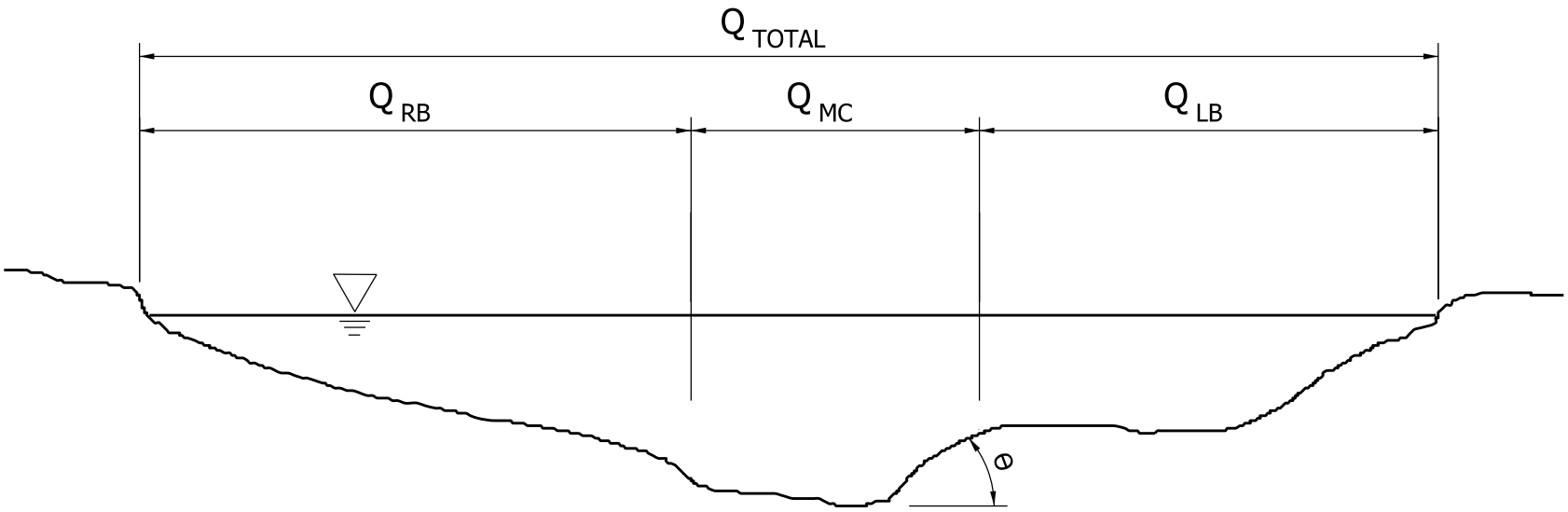

DEFINITION SKETCH FOR
RIPRAP SIZE PARTICLE EROSION

Figure 38-6P (Page 2 of 3)

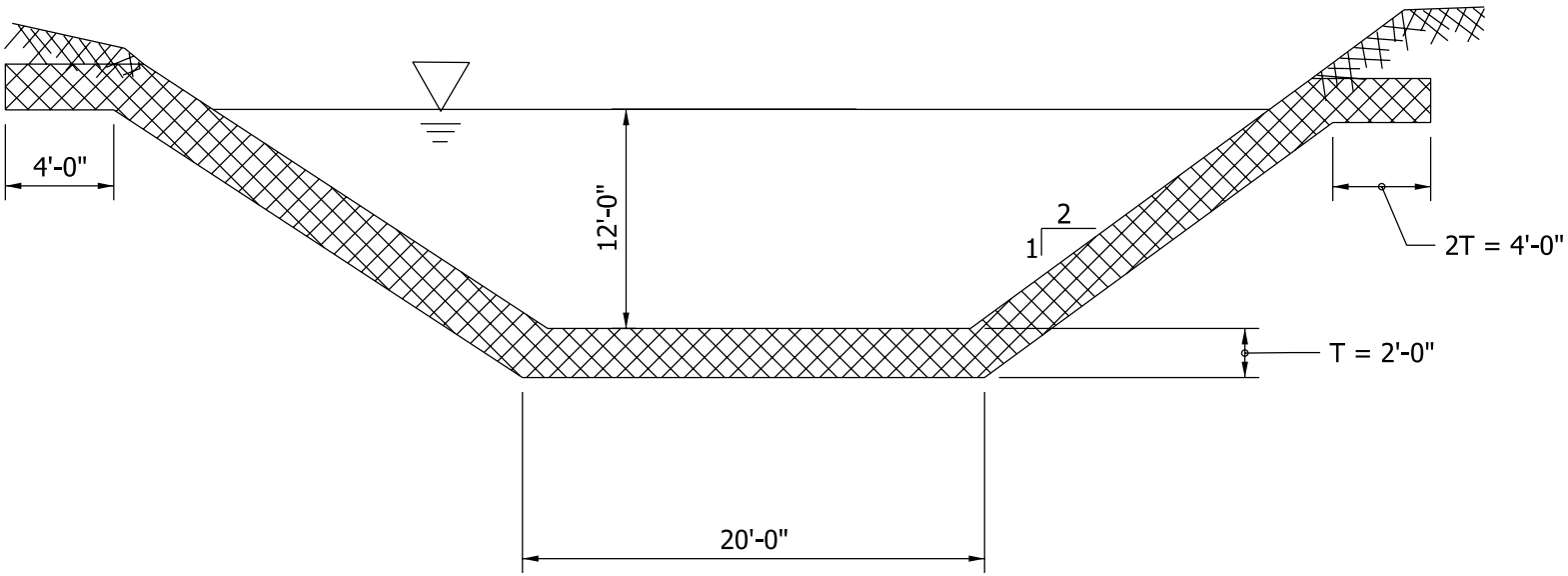

DESIGN SKETCH FOR
RIPRAP SIZE PARTICLE EROSION

Figure 38-6P (Page 3 of 3)