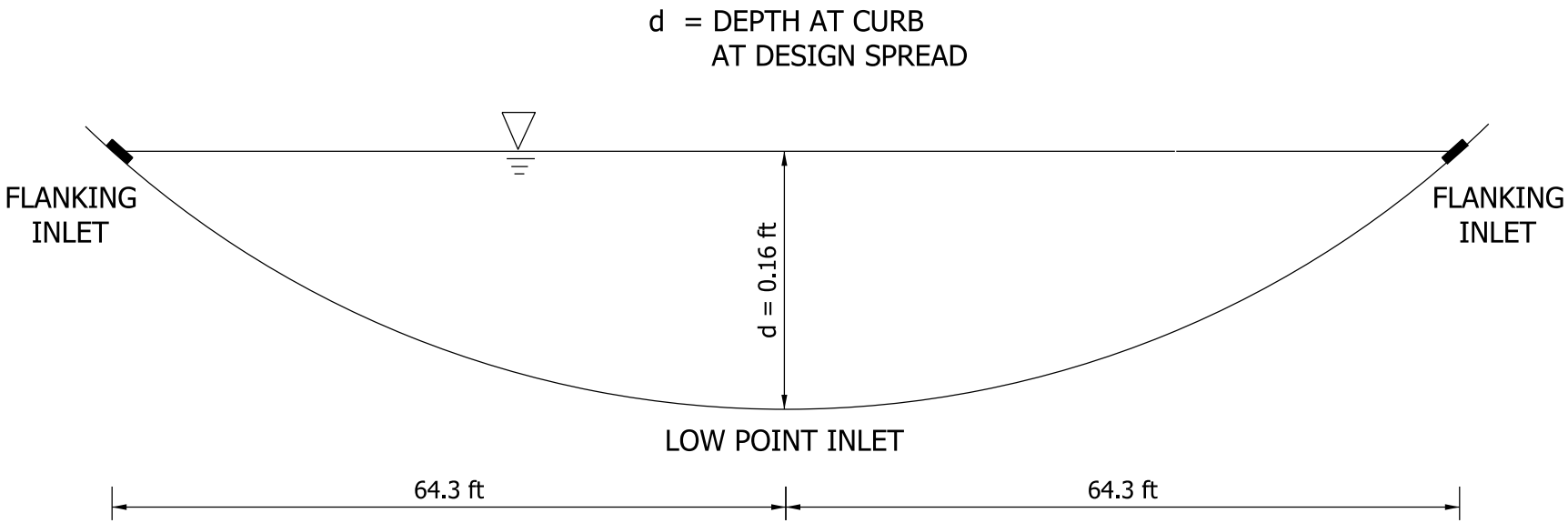

EXAMPLE PROBLEM 36-10.3
FLANKING INLETS AT SAG POINT

Figure 36-10E(1)