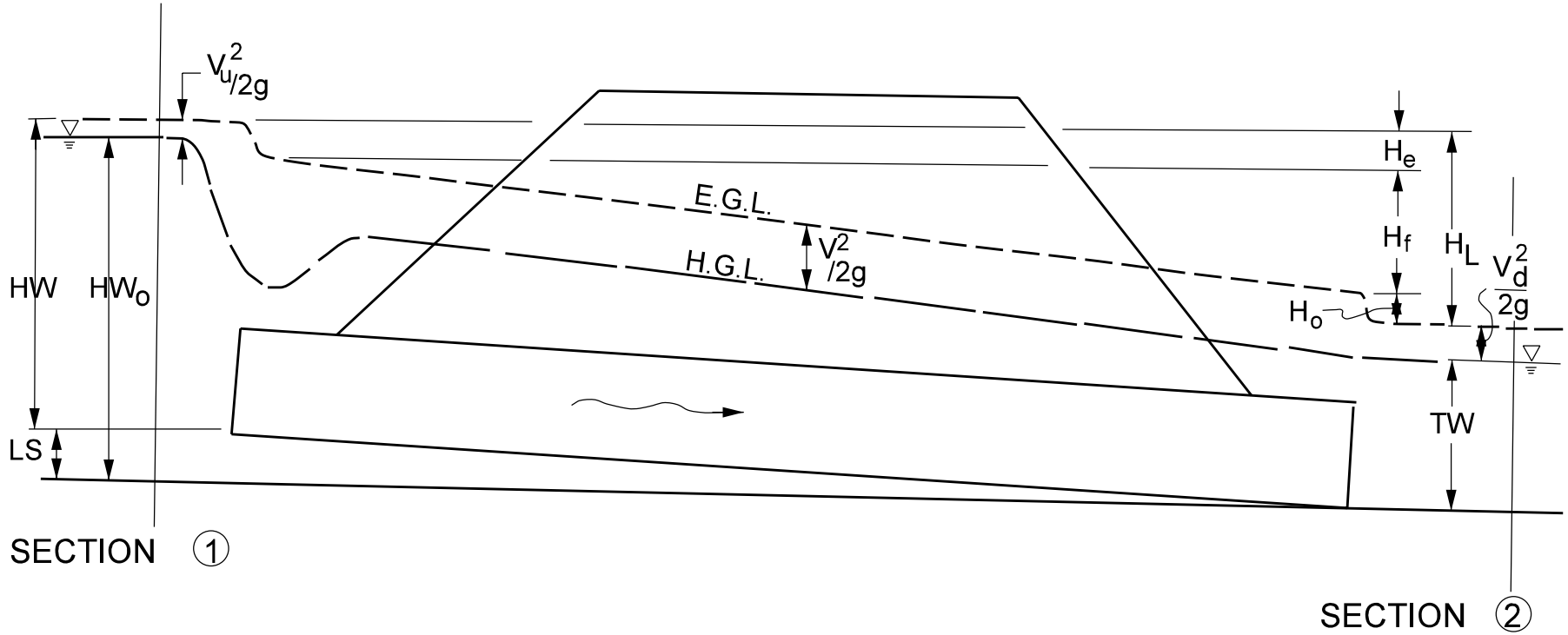

FLOW TYPE IV

Figure 31-5D