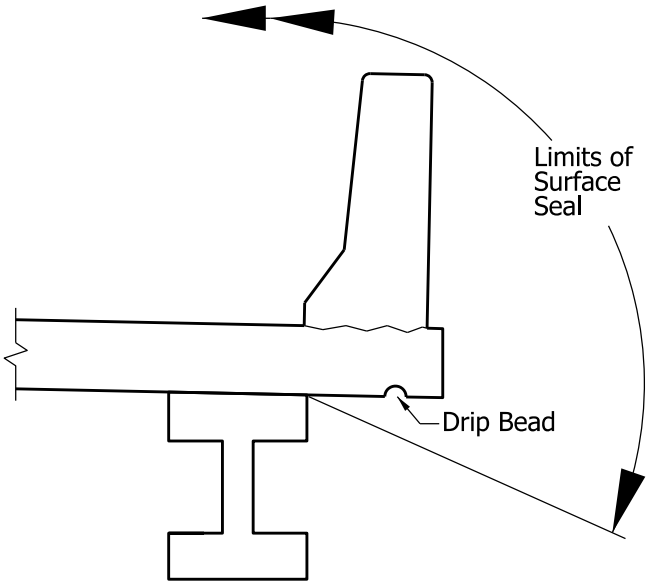

BRIDGE WITH STRUCTURAL MEMBERS

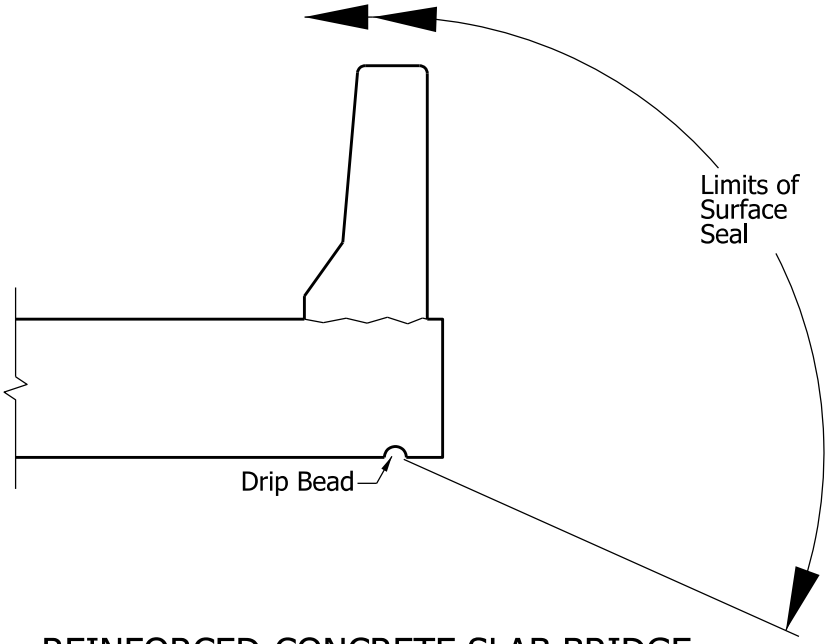

REINFORCED-CONCRETE SLAB BRIDGE

LIMITS OF SURFACE SEAL TO BE SHOWN ON PLANS

Figure 17-5A (0)