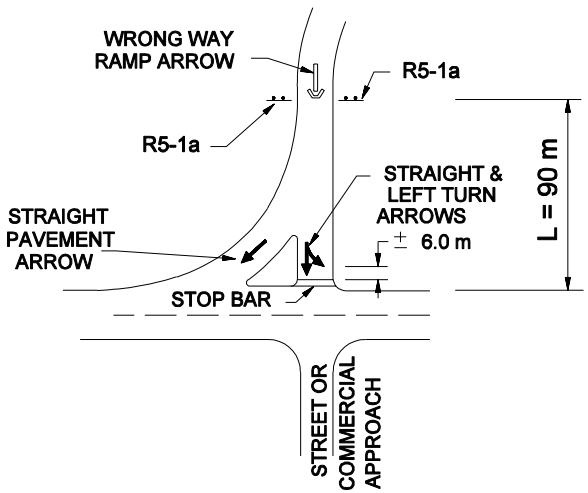

DETAIL "A"

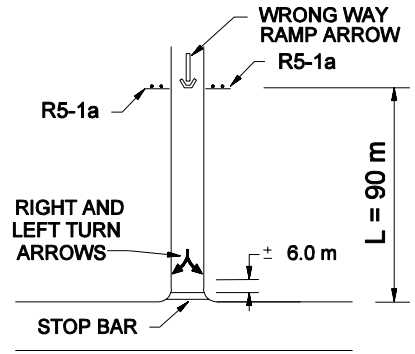

DETAIL "B"

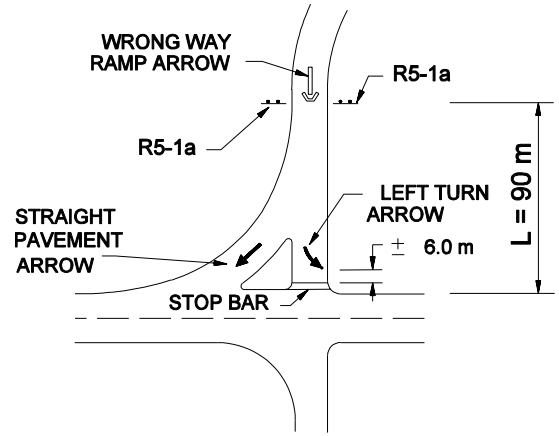

DETAIL "C"

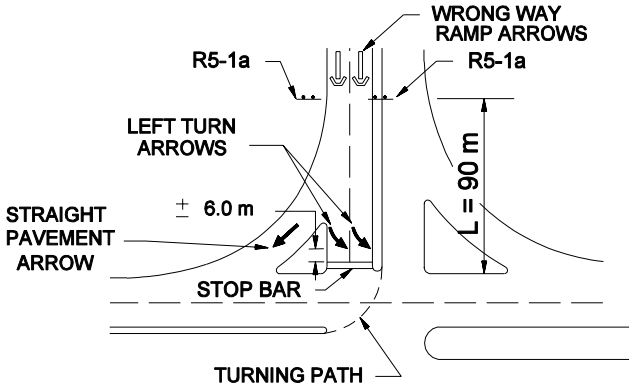

DETAIL "D"

Notes:

1. *See INDOT Standard Drawings for RPM Locations.*
2. *R5-!a is a "WRONG WAY " sign.*

WRONG-WAY MARKINGS

Figure 76-2T